CARDI

www.cardi.biz

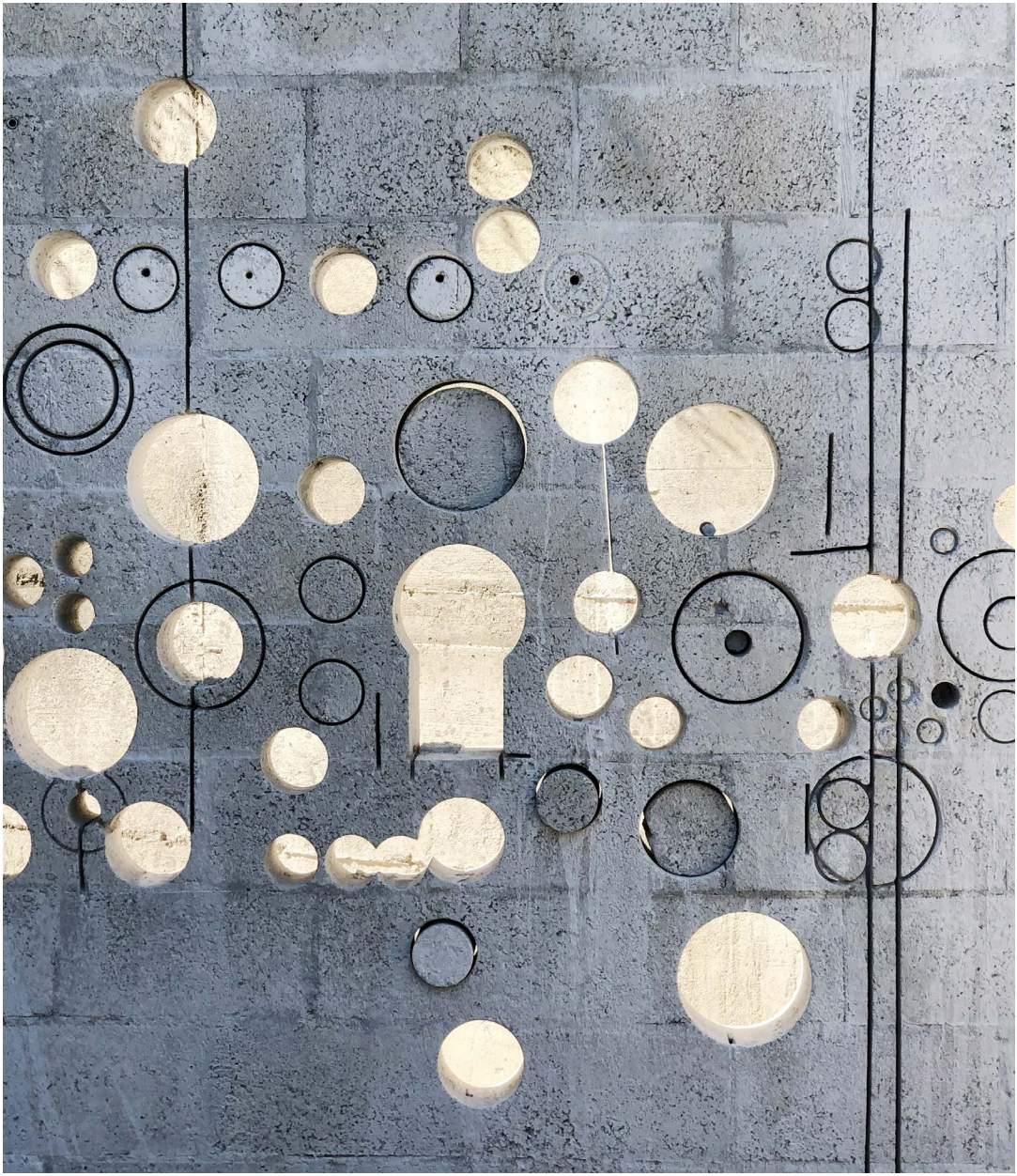

GENERAL CATALOGUE

drilling / cutting / sawing

TABLE OF CONTENTS

- DRILLING • pag. 3
  - HAND-HELD CORE DRILLS • pag. 5
  - HAND-HELD CORE DRILLS WITH DRILL STAND • pag. 6
  - CORE DRILL KITS FOR SPECIFIC APPLICATIONS • pag. 10
    - core drill kit for marble/granite/stone • pag. 10
    - core drill kit for plumbers • pag. 11
    - core drill kit for chimneys, heating systems fitters • pag. 13
    - core drill kit for electricians • pag. 13
  - STATIONARY CORE DRILLING • pag. 14
    - STATIONARY CORE DRILLS - SINGLE-PHASE 110-120 V • pag. 15
    - COMPACT CORE DRILL MOTORS • pag. 19
    - PROFESSIONAL CORE DRILL MOTORS • pag. 20
    - TWIN MOTOR CORE DRILLS • pag. 21
    - CORE DRILL STANDS • pag. 22
    - ACCESSORIES FOR STATIONARY CORE DRILLING • pag. 25
      - EXTRA LONG COLUMN DRILL STAND • pag. 25
      - SEMI-AUTOMATIC FEEDING SYSTEM • pag. 25
  - ACCESSORIES FOR CORE DRILLS • pag. 26
- CUTTING • pag. 30
  - ELECTRIC HAND-HELD BLADE SAWS • pag. 31
  - WALL CHASER • pag. 35
- SAWING • pag. 36
  - CHAINSAWS • pag. 37
- SYSTEMS • pag. 41
  - DA VINCI SYSTEM • pag. 41
- DIAMOND TOOLS • pag. 44

CE

Made in Italy

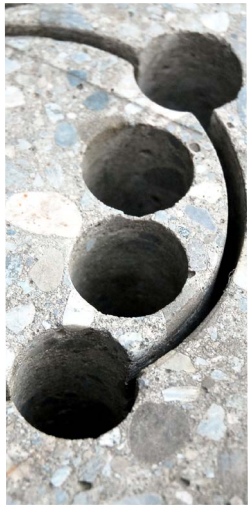

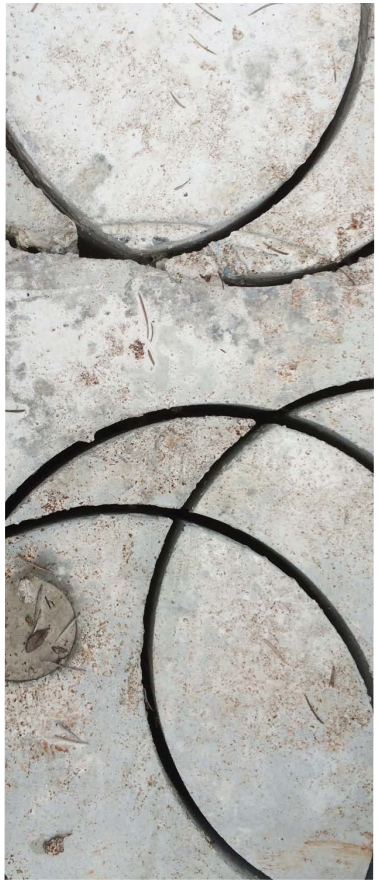

About us

We are CARDI, a leading manufacturer of diamond drilling, cutting and sawing solutions for the construction industry.

We have launched our first core drill in 1985 and we have come a long way since then. Today general contractors, construction workers and professional drilling and cutting companies, like you, can count on CARDI's wide range of diamond core drills, blade saws, chainsaws and diamond tools.

We know its tough out there on the field.
That's why each of our power tools is made to ensure top-notch quality and reliability.
All our products are designed and manufactured with passion, expertise and craftsmanship by our team in Italy.

We have been pioneers in technological development throughout the years, launching innovative products as the first single-phase chainsaw, the powerful 3-phase water-cooled core drill motors and innovative electronic and mechanical safety features as the CARDI TOTAL PROTECTION SYSTEM.

Our latest innovation, DIAMOND PULSE-TECH, is an advanced hybrid drilling technology that is revolutionizing the drilling industry.

Take a look at our drilling, cutting and sawing range.

We are looking forward to helping you find the right solution for your job and to making it easier, everyday.

Why choosing CARDI?

QUALITY

- **Made in Italy, by CARDI**
  - All our products are designed and manufactured in our plant near Milan, Italy, ensuring control over quality in each phase, from design to assembly
- **Developed to last longer**
  - Each component is designed to last longer, using selected materials and leveraging manufacturing processes fine-tuned in 35 years of company history
- **Passing the toughest tests**
  - Every product passes the toughest, most comprehensive tests in the industry
  - Proprietary tests were developed and added to simulate the on-load conditions on the field, to ensure a higher product life and reliability

INNOVATION

- **At the technological frontier**
  - High and continuous investments in R&D are being made to ensure our products keep being at the forefront of technology, to provide better solutions to the users' problems
- **Delivering real innovations**
  - COCCODRILLO35: single-phase diamond chainsaw for construction workers
  - FR range: powerful 3-phase water-cooled core drill motors
  - DIAMOND PULSE-TECH: innovative core drills with advanced hybrid technology with micro-percussion, to drill dry and wet with unmatched speed
  - CARDIFACILE: device to easily and quickly release the diamond core bit

SUPPORT

- **CARDI commercial and technical support**
  - A dedicated sales support is available to help on any commercial or technical question
- **Global network of dealers and service centers**
  - A worldwide network of authorized dealers is there to provide support
  - A global network of authorized service centers is available to provide technical service, with CARDI-trained mechanics handling repairs according to CARDI standards
- **Fast-track for spare parts**
  - CARDI warehouse can ship spare parts globally within 48h in case of need

SAFETY

- **CARDI TOTAL PROTECTION SYSTEM**
  - A combination of functions, electronic and mechanical, is present in each machine and works in synergy to ensure top-level protection for the operator and the product itself
- **Setting the standards**
  - Safety has always been our utmost priority and we strive to anticipate and implement improvements that increase the safety for the operator, setting the standard for the industry

HAND-HELD CORE DRILLS

T2000 MS-13
T2000 MA-14
T1800 102 MU-EL
T0L MU-EL
T2200 ME-24
T1 MU-EL
T1 ME-EL
P2000 MS-13-K

HAND-HELD CORE DRILLS WITH DRILL STAND

CARDI 185
CARDI 187
CARDI 189
CARDI 202-K
CARDI 183-K
CARDI 184-K

FEATURES

HAND-HELD CORE DRILLS AND HAND-HELD CORE DRILLS WITH DRILL STAND

USERS

- general contractors, construction businesses
- plumbers and heating systems fitters
- electricians, fitters, installers

APPLICATIONS

- chimneys, heaters, boilers installation
- pipes installation and ventilation outlets for air conditioning and heating systems
- fire-protection systems, alarms and security, surveillance systems
- drillings for anchoring of machinery and plants
- installation of guardrails, barriers and fences

ADVANTAGES

All the CARDI core drills are equipped with:

The **CARDI TOTAL PROTECTION SYSTEM**, which ensures:

- a safer drilling experience, avoiding hits on the arms of the operator
- faster drilling, thanks to the high power and torque of the electronic-controlled motor
- no breakdowns and very limited service and maintenance costs

The **INTEGRATED DUST EXTRACTION SYSTEM**, available on selected models, which ensures an:

- efficient dry drilling, avoiding the use of water
- efficient containment of dust, protecting your health

The **CARDI DIAMOND CORE BITS**, manufactured with laser-welded segments, which provides:

- highly-resistant welding of the segments, suitable for the high temperatures of dry cutting
- high efficiency and productivity reducing drilling time and operator's effort and fatigue

TOTAL PROTECTION SYSTEM BY CARDI

It consists in the combination of four functions, electronic and mechanical, which are able to work in synergy to ensure maximum protection for the operator and for the machine:

- **CARDI electronic clutch** or electronic load limiter:
  - protects from overloads and prevents damages to the motor
  - no breakdown during your work and very limited service costs
- **Soft start** (peaks limiter):
  - ensures that the machine can be plugged into a regular household outlet
  - avoids tears on the arms when drilling starts
  - avoids the intervention of the line protection automatic switches
- **Safety mechanical clutch** or mechanical torque limiter:
  - protects the operator in case the core bit gets stuck and suddendly stops
  - avoids dangerous tears on the arms
  - avoids damages to the gearbox
- **PRCD** (Portable Residual Current Device) - **GFI** (Ground Fault Interrupter) mounted as standard on the electrical cable (only on wet drilling machines):
  - protects in case of electrical malfunctioning and loss of insulation
  - operates in case of live parts coming into contact with water
  - avoids an unintentional restart in the event of drop/loss and coming back of power

MATERIALS APPLICATION CHART

In the chart below you can detect your core drill based on the material to be drilled and the required drilling technique

DRILLING TECHNIQUE >	HAND-HELD DRILLING - RECOMMENDED NOT OVER Ø 7" -			DRILLING WITH DRILL STAND	
	dry drilling	dry with dust extraction system	wet drilling	dry with dust extraction system	wet drilling
MATERIALS / MODELS >	T2000 MS-13 P2000 MS-13-K	T2000 MA-14 T2000 ME-14 T2200 ME-24 T1 ME-EL	T1800 102 MU-EL T0L MU-EL T2200 ME-24 T1 MU-EL T1 ME-EL	CARDI 183 / 183-K / 184-K / 185 / 189	CARDI 183 / 183-K 185 / 187 / 189 / 202-K
gasbeton - ytong - lecabeton etc	●	●	●	●	●
tuff stone and sand stone	●	●	●	●	●
poroton	●	●	●	●	●
hollow and full bricks	●	●	●	●	●
ceramic and gres			●		●
hollow and full concrete blocks	●	●	●	●	●
masonry and limestone	●	●	●	●	●
asphalt			●		●
marble			●		●
granite and hard stones			●		●
Non-reinforced concrete	●	●	●	●	●
light reinforced concrete	●	●	●	●	●
reinforced concrete			●		●

T2000 MS-13

HAND-HELD CORE DRILL - DRY DRILLING

1 SPEED

	drilling diameter MASONRY	drilling diameter CONCRETE	suggested depth (with extension)
	6"¼	6"¼	12"

dry drilling diamond core bits
M16 - 4", see pag. 45

EL SOFT START AIR

TECHNICAL SPECIFICATIONS		T2000 MS-13
CURRENT (110-120 V - 50/60 Hz)	A	15 (MAX 18)
R.P.M. IDLE / ON LOAD	r.p.m.	2,090 / 1,650
DRILLING RANGE IN MASONRY / ABRASIVE	Ø in	up to 6"¼
DRILLING RANGE IN CONCRETE	Ø in	up to 6"¼
BIT SPINDLE CONNECTION	---	M18 x 2.5
MATERIALS TO BE DRILLED		see chart on page 4
WEIGHT	Kg/lb	4.8 / 11
SUPPLIED INTO		PLASTIC CASE

ACCESSORIES

503148 - adaptor M18(f) - M16(m) **INCLUDED**

505561 - dust extraction chuck

506135 - quick adaptor M16 and SDS PLUS bit;

DPT H COMPACT dust extractor

506134 - SDS PLUS bit Ø.12 L=260 mm

503134 - extension M16 L=11" ¾

T1800 102 MU-EL

HAND-HELD CORE DRILL WET DRILLING

1 SPEED

	drilling diameter MASONRY	drilling diameter CONCRETE	suggested depth (with extension)
	5"	4"	12"
	6"	5"	20"

EL SOFT START AIR PRCD

TECHNICAL SPECIFICATIONS		T1800 102 MU-EL
CURRENT (110-120 V - 50/60 Hz)	A	15 (MAX 18)
R.P.M. IDLE / ON LOAD	r.p.m.	940 / 740
DRILLING RANGE IN MASONRY / ABRASIVE	Ø in	up to 6"
DRILLING RANGE IN CONCRETE	Ø in	up to 5"
MAX RECOMMENDED HAND-HELD DRILLING	Ø in	5"
BIT SPINDLE CONNECTION	---	1" ¼ UNC + 5/8"
MATERIALS TO BE DRILLED		see chart on page 4
WEIGHT	Kg/lb	5.6 / 13
SUPPLIED INTO		PLASTIC CASE

ACCESSORIES

501367 - adaptor 1" ¼ (f) - 1/2G(f)

506102 - quick bit unscrew device 1" ¼

506250 - Anchoring fixing bolt kit

501370 - 1" ¼ ALU extension L=11" ¾

L180 - tilting core drill stand

T2000 MA-14

HAND-HELD CORE DRILL
DRY DRILLING DUST EXTRACTION SYSTEM

DUST FREE EXTRACTION SYSTEM INTEGRATED — 1 SPEED — ASP.

	drilling diameter MASONRY	drilling diameter CONCRETE	suggested depth (with extension)
	6"	6"	12"
	8"	6"	20"

core bits 1" ¼ - L=10"
for dust extraction, see
pag. 45

EL SOFT START AIR

TECHNICAL SPECIFICATIONS		T2000 MA-14
CURRENT (110-120 V - 50/60 Hz)	A	15 (MAX 18)
R.P.M. IDLE / ON LOAD	r.p.m.	1,480 / 1,170
DRILLING RANGE IN MASONRY / ABRASIVE	Ø in	up to 8"
DRILLING RANGE IN CONCRETE	Ø in	up to 6"
BIT SPINDLE CONNECTION	---	1" ¼ UNC
MATERIALS TO BE DRILLED		see chart on page 4
WEIGHT	Kg/lb	5.6 / 13
SUPPLIED INTO		PLASTIC CASE

ACCESSORIES

501367 - adaptor 1" ¼ (f) - 1/2G(f)

506102 - quick bit unscrew device 1" ¼

506250 - Anchoring fixing bolt kit

501370 - 1" ¼ ALU extension L=11" ¾

DPT H COMPACT dust extractor

L180 - tilting core drill stand

core bits 1" ¼ - for dust extraction, see pag. 45
core bits 1" ¼ - wet drilling, see pag. 46

2 SPEED

	drilling diameter MASONRY	drilling diameter CONCRETE	suggested depth (with extension)
	5"	4"	12"
	6"	5"	20"

ACCESSORIES

501367 - adaptor 1" ¼ (f) - 1/2G(f)

506102 - quick bit unscrew device 1" ¼

506250 - Anchoring fixing bolt kit

501370 - 1" ¼ ALU extension L=11" ¾

L180 - tilting core drill stand

core bits 1" ¼ - wet drilling, see pag. 46

T0L MU-EL

HAND-HELD CORE DRILL
WET DRILLING

EL SOFT START AIR PRCD

TECHNICAL SPECIFICATIONS			T0L MU-EL
CURRENT (110-120 V - 50/60 Hz)		A	15 (MAX 18)
R.P.M. IDLE / ON LOAD	GEAR I	r.p.m.	1,200 / 950
	GEAR II	r.p.m.	2,200 / 1,740
DRILLING RANGE MASONRY / ABRASIVE		Ø in	up to 6"
DRILLING RANGE IN CONCRETE		Ø in	up to 5"
MAX RECOMMENDED HAND-HELD DRILLING		Ø in	5"
BIT SPINDLE CONNECTION		---	1" ¼ UNC + 5/8"
MATERIALS TO BE DRILLED			see chart on page 4
WEIGHT		Kg/lb	5.5 / 12
SUPPLIED INTO			PLASTIC CASE

T2200 ME-24

HAND-HELD CORE DRILL DRY & WET DRILLING WITH DUST EXTRACTION SYSTEM

DUST FREE EXTRACTION SYSTEM INTEGRATED · 2 SPEED · ASP

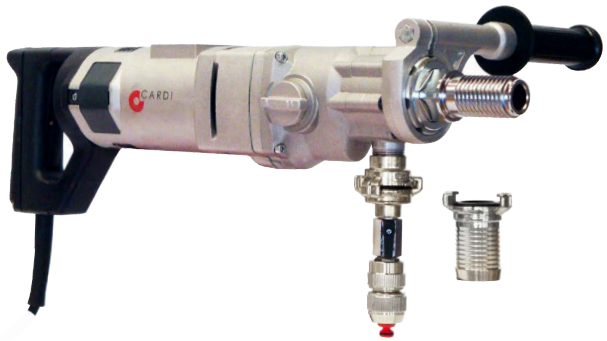

	drilling diameter MASONRY	drilling diameter CONCRETE	suggested depth (with extension)
	7"	7"	16"
	8"	8"	28"

EL · SOFT START · PRCD

TECHNICAL SPECIFICATIONS		T2200 ME-24
CURRENT (110-120 V - 50/60 Hz)	A	18 (MAX 22)
R.P.M. IDLE / ON LOAD SPEED I	r.p.m.	810 / 610
SPEED II	r.p.m.	1,490 / 1,110
DRILLING RANGE IN MASONRY / ABRASIVE	Ø in	up to 8"
DRILLING RANGE IN CONCRETE	Ø in	up to 8"
MAX RECOMMENDED HAND-HELD DRILLING	Ø in	up to 7"
BIT SPINDLE CONNECTION	---	1" ¼ UNC
MATERIALS TO BE DRILLED		see chart on page 4
WEIGHT	Kg/lb	7 / 16
SUPPLIED INTO		PLASTIC CASE

TECHNICAL SPECIFICATIONS - CORE DRILL WITH STAND		CARDI 185
CORE DRILL MODEL		T2200 ME-24
DRILL STAND MODEL		L 180
DRILL STAND TILTING UP TO		45°
WEIGHT (CORE DRILL + DRILL STAND)	Kg/lb	7/16 + 10/22
CORE DRILL SUPPLIED INTO		PLASTIC CASE

ACCESSORIES

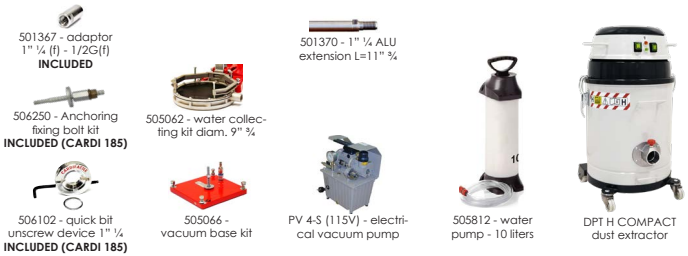

core bits 1" ¼ - for dust extraction, see pag. 45
core bits 1" ¼ - wet drilling, see pag. 46

CARDI 185

HAND-HELD CORE DRILL WITH DRILL STAND

CARDI 187

HAND-HELD CORE DRILL WITH DRILL STAND

T1 MU-EL

HAND-HELD CORE DRILL WET DRILLING FOR HEAVY DUTY USE

3 SPEED

	drilling diameter MASONRY	drilling diameter CONCRETE	suggested depth (with extension)
	7"	7"	16"
	10"	8"	35"

EL · SOFT START · PRCD

TECHNICAL SPECIFICATIONS		T1 MU-EL
CURRENT (110-120 V - 50/60 Hz)	A	18 (MAX 22)
R.P.M. IDLE / ON LOAD SPEED I	r.p.m.	770 / 580
SPEED II	r.p.m.	1,860 / 1,380
SPEED III	r.p.m.	2,580 / 1,920
DRILLING RANGE IN MASONRY / ABRASIVE	Ø in	up to 10"
DRILLING RANGE IN CONCRETE	Ø in	up to 8"
MAX RECOMMENDED HAND-HELD DRILLING	Ø in	up to 7"
BIT SPINDLE CONNECTION	---	1" ¼ UNC + 5/8"
MATERIALS TO BE DRILLED		see chart on page 4
WEIGHT	Kg/lb	7.3 / 16
SUPPLIED INTO		PLASTIC CASE

TECHNICAL SPECIFICATIONS - CORE DRILL WITH STAND		CARDI 187
CORE DRILL MODEL		T1 MU-EL
DRILL STAND MODEL		L 180
DRILL STAND TILTING UP TO		45°
WEIGHT (CORE DRILL + DRILL STAND)	Kg/lb	7.3/16 + 10/22
CORE DRILL SUPPLIED INTO		PLASTIC CASE

ACCESSORIES

core bits 1" ¼ - wet drilling, see pag. 46

T1 ME-EL

HAND-HELD CORE DRILL DRY & WET DRILLING WITH DUST EXTRACTION SYSTEM FOR HEAVY DUTY USE

DUST FREE EXTRACTION SYSTEM INTEGRATED — 3 SPEED — ASP.

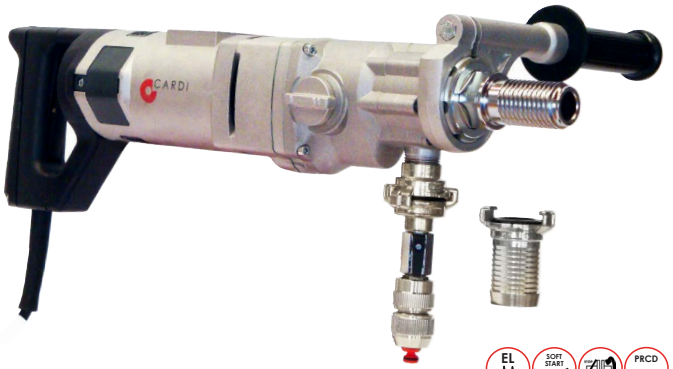

EL — SOFT START — PRCD

TECHNICAL SPECIFICATIONS			T1 ME-EL
CURRENT (110-120 V - 50/60 Hz)		A	18 (MAX 22)
R.P.M. IDLE / ON LOAD	SPEED I	r.p.m.	770 / 580
	SPEED II	r.p.m.	1,860 / 1,380
	SPEED III	r.p.m.	2,580 / 1,920
DRILLING RANGE IN MASONRY / ABRASIVE		Ø in	up to 10"
DRILLING RANGE IN CONCRETE		Ø in	up to 8"
MAX RECOMMENDED HAND-HELD DRILLING		Ø in	up to 7"
BIT SPINDLE CONNECTION		---	1" ¼ UNC
MATERIALS TO BE DRILLED			see chart on page 4
WEIGHT		Kg/lb	7.3 / 16
SUPPLIED INTO			PLASTIC CASE

TECHNICAL SPECIFICATIONS - CORE DRILL WITH STAND		CARDI 189
CORE DRILL MODEL		T1 ME-EL
DRILL STAND MODEL		L 180
DRILL STAND TILTING UP TO		45°
WEIGHT (CORE DRILL + DRILL STAND)	Kg/lb	7.3/16 + 10/22
CORE DRILL SUPPLIED INTO		PLASTIC CASE

ACCESSORIES

501367 - adaptor 1" ¼ (f) - 1/2G(f)
INCLUDED

506250 - Anchoring fixing bolt kit
INCLUDED (CARDI 189)

506102 - quick bit unscrew device 1" ¼
INCLUDED (CARDI 189)

506148 spacer H=1.18"
INCLUDED (CARDI 189)

PV 4-S (115V) - electri-cal vacuum pump

505062 - water collec-ting kit diam. 9" ¾

501370 - 1" ¼ ALU extension L=11" ¾

505066 - vacuum base kit

502410 - ALU extension 1" ¼ L=19" ¾

505812 - water pump - 10 liters

DPT H COMPACT dust extractor

core bits 1" ¼ - for dust extraction, see pag. 45
core bits 1" ¼ - wet drilling, see pag. 46

	drilling diameter MASONRY	drilling diameter CONCRETE	suggested depth (with extension)
	7"	7"	16"
	10"	8"	35"

CARDI 189

HAND-HELD CORE DRILL WITH DRILL STAND

1 SPEED

THE KIT CARDI 202-K IS SUPPLIED IN THE HEAVY DUTY PLASTIC CASE WITH WHEELS

CARDI 202-K

CORE DRILL KIT FOR MARBLE-GRANITE-STONE DRILLING

EL — SOFT START — PRCD

TECHNICAL SPECIFICATIONS		CARDI 202-K
CURRENT (110-120 V - 50/60 Hz)	A	18 (MAX 22)
R.P.M. IDLE / ON LOAD	r.p.m.	900 / 670
DRILLING RANGE IN MARBLE - GRANITE - STONE	Ø in	up to 8"
DRILLING RANGE IN CONCRETE - MASONRY	Ø in	up to 6"
BIT SPINDLE CONNECTION	---	1" ¼ UNC + 5/8"
FIXING		VACUUM OR ANCHOR
MATERIALS TO BE DRILLED		Marble - Granite - Stone
WEIGHT	Kg/lb	15 / 33
TRANSPORT PLASTIC CASE WITH WHEELS (TROLLEY)		INCLUDED

	drilling diameter MAX MARBLE - GRANITE - STONE	drilling diameter MAX CONCRETE and MASONRY
	8"	6"

THE CORE DRILL KIT CARDI 202-K INCLUDES:

1. core drill motor T2200 SU-15, 18A (MAX 22)
2. drill stand for core drill motor, model L 160-COMPACT
3. 505066 - vacuum base kit
4. 506250 - Anchoring fixing bolt kit
5. 504428 - transport plastic case with wheels (trolley)
6. diamond core bit **CDP XXX**, diam. available up to 4"

ACCESSORIES

PV 4-S (115V) - electrical vacuum pump

505812 - water pump - 10 liters

DIAMOND CORE BITS FOR GRANITE-STONE-MARBLE
CONNECTION 1/2G - LENGTH 4"

DIAMETERS mm	DIAMETERS in	SEGMENTS # x L - W - H, mm	SEGMENTS # x L - W - H, in	CODE
35	1.38	4 x 20 - 2.5 - 9	4 x 0.79 - 0.10 - 0.35	CDP 035
40	1.57	4 x 24 - 2.5 - 9	4 x 0.94 - 0.10 - 0.35	CDP 040
45	1.77	4 x 27 - 2.5 - 9	4 x 1.06 - 0.10 - 0.35	CDP 045
50	1.97	5 x 24 - 2.5 - 9	5 x 0.94 - 0.10 - 0.35	CDP 050
60	2.36	6 x 24 - 2.5 - 9	6 x 0.94 - 0.10 - 0.35	CDP 060
70	2.76	6 x 24 - 2.8 - 9	6 x 0.94 - 0.11 - 0.35	CDP 070
80	3.15	7 x 24 - 2.8 - 9	7 x 0.94 - 0.11 - 0.35	CDP 080
90	3.54	8 x 24 - 2.8 - 9	8 x 0.94 - 0.11 - 0.35	CDP 090
100	3.94	9 x 24 - 3.3 - 9	9 x 0.94 - 0.13 - 0.35	CDP 100
120	4.72	9 x 24 - 3.3 - 9	9 x 0.94 - 0.13 - 0.35	CDP 120

= number of segments W = segment width H = segment height L = segment length

CARDI 183-K
CORE DRILL KIT FOR PLUMBERS

DUST FREE EXTRACTION SYSTEM INTEGRATED · 1 SPEED · ASP

EL · SOFT START · AIR · PRCD

TECHNICAL SPECIFICATIONS

CURRENT (110-120 V - 50/60 Hz)	A	15 (MAX 18)
CORE DRILL STAND MODEL		L 180
R.P.M. IDLE / ON LOAD	r.p.m.	1,480 / 1,170
DRILLING RANGE IN MASONRY / ABRASIVE	Ø in	up to 8"
DRILLING RANGE IN CONCRETE	Ø in	up to 7"
MAX RECOMMENDED HAND-HELD DRILLING	Ø in	6"
BIT SPINDLE CONNECTION	---	1" ¼ UNC
DRILL STAND TILTING UP TO		45°
WEIGHT (CORE DRILL + DRILL STAND + FLUSH DRILLING DEVICE 502305)	Kg/lb	18.8 / 42
HAND-HELD CORE DRILL SUPPLIED INTO		PLASTIC CASE

	drilling diameter MASONRY	drilling diameter CONCRETE	suggested depth (with extension)
	6"	6"	16"

	drilling diameter MASONRY	drilling diameter CONCRETE	suggested depth (with extension)
	8"	7"	19"

502305 - accessory to drill flush to the wall (or floor) and into the corners;
Suitable to drill masonry and concrete up to diam. 3" ¼, hand-held and on drill stand

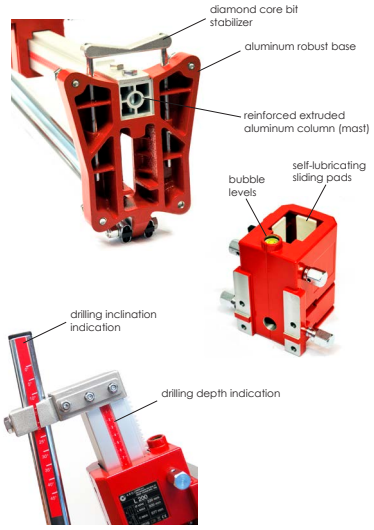

THE KIT FOR PLUMBERS CARDI 183-K INCLUDES:

1. hand-held core drill T2000 ME-14
2. drill stand for hand-held core drill, model L 180
3. 502305 - accessory to drill flush to the wall (or floor) and into the corners
4. 506102 - CARDIFACILE - quick bit unscrew device 1" ¼
5. 501367 - adaptor 1" ¼ F (f) - 1/2G (f)
6. 501370 - core bit extension 1" ¼ L=11" ¾ aluminum
7. 506250 - Anchoring fixing bolt kit
8. 503090 - plastic case for T2000 ME-14
9. diamond core bit **CDU 042-G**, 1/2 G, diameter 1.65"
10. diamond core bit **CDS XXX**, 1" ¼, diam. available up to 5"

ACCESSORIES

501377 - bit extension 1/2G L=11" ¾ · 505062 - water collecting kit diam. 9" ¾ · 505066 - vacuum base kit · PV 4-S (115V) - electrical vacuum pump · 505812 - water pump - 10 liters · DPT H COMPACT dust extractor

FLUSH DRILLING DEVICE

To drill with 1/2G connection core bits, max drilling diameter 3" ¼
Minimum flush drilling diameter: 1" ½

Drilling into corners

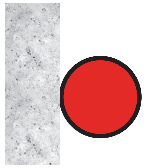

Drilling flush to the wall

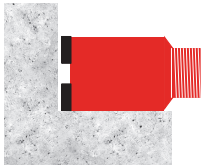

Drilling flush to the floor

Drilling into the grooves

FLUSH TO THE WALL DRILLING

FLUSH TO THE FLOOR AND INTO THE CORNER

FLUSH TO THE FLOOR AND INTO THE CORNER

DRILLING ON DRILL STAND
FLUSH TO THE WALLS AND INTO THE CORNER

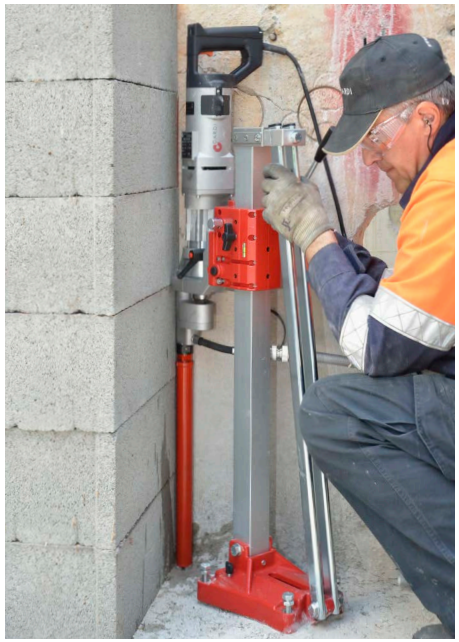

CARDI 184-K

DRY DRILLING, HAND-HELD & ON DRILL STAND

DUST FREE
EXTRACTION SYSTEM INTEGRATED

CORE DRILL KIT FOR CHIMNEYS AND HEATING SYSTEMS FITTERS

TECHNICAL SPECIFICATIONS		
CURRENT (110-120 V - 50/60 Hz)	A	15 (MAX 18)
CORE DRILL STAND MODEL		L 180
R.P.M. IDLE / ON LOAD	r.p.m.	940 / 740
DRILLING RANGE	Ø in	up to 10"
BIT SPINDLE CONNECTION	---	1" ¼ UNC
DRILL STAND TILTING UP TO		45°
WEIGHT (CORE DRILL + DRILL STAND)	Kg/lb	5.6/13 + 10/22
CORE DRILL SUPPLIED INTO		PLASTIC CASE

drilling diameter MASONRY	drilling diameter CONCRETE	suggested depth (with extension)
8"	7"	16"

drilling diameter MASONRY	drilling diameter CONCRETE	suggested depth (with extension)
10"	8"	19"

THE KIT INCLUDES:

1. hand-held core drill T2000 MA-15
2. drill stand for hand-held core drill, model L 180
3. 506148 - spacer kit H=1.18"
4. 506102 - CARDIFACILE - quick bit unscrew device 1" ¼
5. 501370 - core bit extension 1" ¼ L=11" ¾ aluminum
6. 506250 - Anchoring fixing bolt kit
7. 503090 - plastic case for T2000 ME-15
8. core bit CDS XXX, 1" ¼, diam. available up to 5"

ACCESSORIES

DPT H COMPACT dust extractor

P2000 MS-13-K

DRY DRILLING WITH MICROPERCUSSION

CORE DRILL KIT FOR ELECTRICIANS

drilling diameter MASONRY	drilling diameter CONCRETE
6"½	6"½

TECHNICAL SPECIFICATIONS		P2000 MS-13-K
CURRENT (110-120 V - 50/60 Hz)	A	15 (MAX 18)
R.P.M. IDLE / ON LOAD	r.p.m.	2,090 / 1,650
PERCUSSIONS IDLE / ON LOAD	n/min	37,620 / 29,700
DRILLING RANGE IN MASONRY / ABRASIVE	Ø in	up to 6"½
DRILLING RANGE IN CONCRETE	Ø in	up to 6"½
BIT SPINDLE CONNECTION	---	M18 x 2.5
MATERIALS TO BE DRILLED		see chart on page 4
WEIGHT	Kg/lb	4.8 / 10.58
SUPPLIED INTO		PLASTIC CASE

THE CORE DRILL KIT FOR ELECTRICIANS INCLUDES

1. hand-held core drill P2000 MS-13 with micropercussion
2. 503134 - bit extension M16 L=11" ¾
3. 503148 - adaptor M18(f)-M16(m) for M16 bits
4. 506135 - quick adaptor M16 for SDS PLUS bit
5. 506134 - bit SDS PLUS Ø12 L=260 mm
6. 503060 - plastic case for P2000 MS-13
7. diamond core bit CDS XXX-M16, diam. available up to 5.2"

ACCESSORIES

505561 - dust extraction chuck

DPT H COMPACT dust extractor

STATIONARY CORE DRILLS

SINGLE-PHASE 110-120V

CARDI 200
CARDI 250
CARDI 306
CARDI 400
CARDI 500
CARDI 501
CORE DRILL MOTORS
CORE DRILL STANDS

TWIN MOTOR

BM 805
BM 1005

CARDI 200 - CARDI 250

CARDI 200

18 A - 3 speed
drilling up to Ø 8"

CARDI 250

25 A - 2 speed
drilling up to Ø 10"

USERS

- general contractors, construction businesses
- plumbers and heating systems fitters
- electricians, fitters, installers
- cutting and coring professionals

APPLICATIONS

- openings in walls and floors for installations (air, water, gas etc.)
- drillings for fitting and anchoring of guarrails, fences, railings
- sampling of concrete cores for testing and verification
- continuous drilling of considerable length

TOTAL PROTECTION SYSTEM BY CARDI - ADVANTAGES

It consists of a combination of different functions, both electronic and mechanical, working in synergy to ensure the highest level of protection for the operator and for the machine:

- **CARDI electronic clutch or electronic load limiter:**
  - protects from overloads and prevents damages to the motor
  - no breakdown during your work and very limited service costs
- **soft start (peaks limiter):**
  - allows the machine to be plugged into a regular household outlet, avoiding the intervention of the line protection automatic switches
  - avoids peaks of power and hits to the anchoring system when the drilling starts
- **safety mechanical clutch:**
  - protects the operator in case the core bit gets stuck and suddendly stops
  - avoids damages to the gearbox
- **PRCD - GFI**
  - protects in case of electrical malfunctioning and loss of insulation
  - operates in case of live parts coming into contact with water
  - avoids an unintentional restart in the event of drop/loss and coming back of power

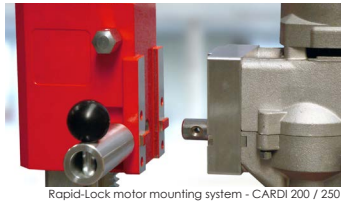

Rapid-Lock motor mounting system - CARDI 200 / 250

for core bits, see pag. 46

FEATURES

- **aluminum-made core drill motor**: heavy duty but light core drill motor
- **quick connection system:** allows safe and fast coupling and de-coupling of motor and stand, so that less weight can be handled during transport and set-up
- **tilted drilling:** CARDI core drills can be tilted up to 45°
- **CARDIFACILE:** quick bit unscrewing device supplied as standard: 41 and 32 mm wrenches are no longer needed to disassemble the core bit at the end of drilling
- **multipurpose feeding handle** (CARDI 200 / 250): the feeding handle is suitable to operate also on all screws and across different regulations
- **core bit stabilizer and bubble levels** (CARDI 200 / 250): devices to increase drilling accuracy
- **anchoring fixing bolt kit:** accessory supplied as standard, usable many times
- **contrast tie-rod:** device that, using a scaffold pipe, allows to stabilize the core drill and to work more safely (CARDI 306 / 400)

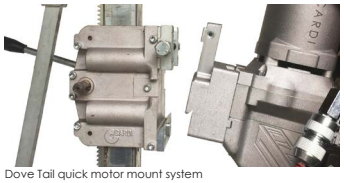

Dove Tail quick motor mount system
CARDI 306 and CARDI 400

Contrast tie-rod to be used with scaffold tube.

Detail of C 520 steel anchor base

for core bits, see pag. 46

TECHNICAL SPECIFICATIONS			CARDI 200	CARDI 250
CORE DRILL MOTOR MODEL			T1 200-EL	T4 300-EL
CORE DRILL STAND MODEL			L 200	L 250
CURRENT (110-120 V - 50/60 Hz)		A	18 (MAX 22)	25 (MAX 31)
R.P.M. IDLE / ON LOAD	SPEED I	r.p.m.	560 / 410	440 / 290
	SPEED II	r.p.m.	1,340 / 990	1,030 / 680
	SPEED III	r.p.m.	1,850 / 1,380	
DRILLING RANGE IN CONCRETE - WET		Ø in	up to 8"	up to 10"
BIT SPINDLE CONNECTION		---	1" ¼ UNC + 5/8"	1" ¼ UNC
WEIGHT		Kg/lb	19 / 42	29 / 64

ACCESSORIES

506250 - Anchoring fixing bolt kit
INCLUDED

505062 - water collecting kit diam. 9" ¾

501370 - 1" ¼ ALU extension L=11" ¾

502410 - ALU extension 1" ¼ L=19"1/2

505064 - scaffold anchoring kit

505355 - quick bit unscrew device 1" ¼
INCLUDED

505063 - vacuum base kit

PV 4-S (115V) - electrical vacuum pump

505812 - water pump - 10 liters

CARDI 306 - CARDI 400

CARDI 306

25 A - 2 speed
drilling up to Ø 12"

CARDI 400

25 A - 3 speed
drilling up to Ø 16"

TECHNICAL SPECIFICATIONS			CARDI 306	CARDI 400
CORE DRILL MOTOR MODEL			T4 300-EL	T6 375-EL
CORE DRILL STAND MODEL			C 520	C 520
CURRENT (110-120 V - 50/60 Hz)		A	25 (MAX 31)	25 (MAX 31)
R.P.M. IDLE / ON LOAD	SPEED I	r.p.m.	440 / 290	310 / 200
	SPEED II	r.p.m.	1,030 / 680	700 / 460
	SPEED III	r.p.m.		1,300 / 860
DRILLING RANGE IN CONCRETE - WET		Ø in	up to 12"	up to 16"
BIT SPINDLE CONNECTION		---	1" ¼ UNC	1" ¼ UNC
WEIGHT		Kg/lb	40 / 88	41 / 90

ACCESSORIES

506250 - Anchoring fixing bolt kit
INCLUDED

505355 - quick bit unscrew device 1" ¼
INCLUDED

501852 - spacer H=1.77"
INCLUDED (CARDI 400)

503999 - water collecting kit diam. 9" ¾

505063 - vacuum base kit

501370 - 1" ¼ ALU extension L=11" ¾

PV 4-S (115V) - electrical vacuum pump

502410 - ALU extension 1" ¼ L=19"1/2

505812 - water pump - 10 liters

503160 - scaffold anchoring kit

CARDI 500 - CARDI 501

CARDI 500
25 A - 4 speed
drilling up to Ø 20"

CARDI 501
25 A - 4 speed
drilling up to Ø 20"

TECHNICAL SPECIFICATIONS			CARDI 500	CARDI 501
CORE DRILL MOTOR MODEL			T9 475-EL	T9 475-EL
CORE DRILL STAND MODEL			C 520	C 600
CURRENT (110-120 V - 50/60 Hz)		A	25 (MAX 31)	25 (MAX 31)
R.P.M. IDLE / ON LOAD	SPEED I	r.p.m.	260 / 170	260 / 170
	SPEED II	r.p.m.	500 / 330	500 / 330
	SPEED III	r.p.m.	810 / 540	810 / 540
	SPEED IV	r.p.m.	1,360 / 900	1,360 / 900
DRILLING RANGE IN CONCRETE - WET		Ø in	up to 20"	up to 20"
BIT SPINDLE CONNECTION		---	1" ¼ UNC	1" ¼ UNC
WEIGHT		Kg/lb	42 / 92	46 / 101

ACCESSORIES

506250 - Anchoring fixing bolt kit **INCLUDED**

503999 - water collecting kit diam. 9" ¾

505063 - vacuum base kit

502410 - ALU extension 1" ¼ L= 19"1/2

501370 - 1" ¼ ALU extension L=11" ¾

505355 - quick bit unscrew device 1" ¼ **INCLUDED**

501852 - spacer H=1.77" **INCLUDED**

PV 4-S (115V) - electrical vacuum pump

505812 - water pump - 10 liters

503160 - scaffold anchoring kit

USERS

- general contractors, construction businesses
- cutting and coring professionals

APPLICATIONS

- drilling of medium and big diameters
- drilling of considerable length
- drilling in very hard materials and high reinforced concrete

TOTAL PROTECTION SYSTEM BY CARDI - ADVANTAGES

It consists of a combination of different functions, both electronic and mechanical, working in synergy to ensure the highest level of protection for the operator and for the machine:

- **CARDI electronic clutch or electronic load limiter:**
  - protects from overloads and prevents damages to the motor
  - no breakdown during your work and very limited service costs
- **soft start (peaks limiter)**:
  - allows the machine to be plugged into a regular household outlet, avoiding the intervention of the line protection automatic switches
  - avoids peaks of power and hits to the anchoring system when the drilling starts
- **safety mechanical clutch:**
  - protects the operator in case the core bit gets stuck, suddendly stops
  - avoids damages to the gearbox
- **PRCD - GFI**
  - protects in case of electrical malfunctioning and loss of insulation
  - operates in case of live parts coming into contact with water
  - avoids an unintentional restart in the event of drop/loss and coming back of power

FEATURES

- **aluminum-made core drill motor**: heavy duty but light core drill motor
- **quick connection system:** safe and fast coupling/de-coupling of motor/stand
- **tilted drilling:** can be tilted up to 45°
- **CARDIFACILE:** quick bit unscrewing device supplied as standard
- **multipurpose feeding handle** (CARDI 501): suitable to operate on all screws
- **anchoring fixing bolt kit:** accessory supplied as standard, re-usable
- **contrast tie-rod:** device that stabilizes the core drill, guaranteeing higher safety

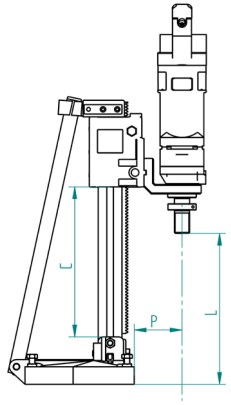

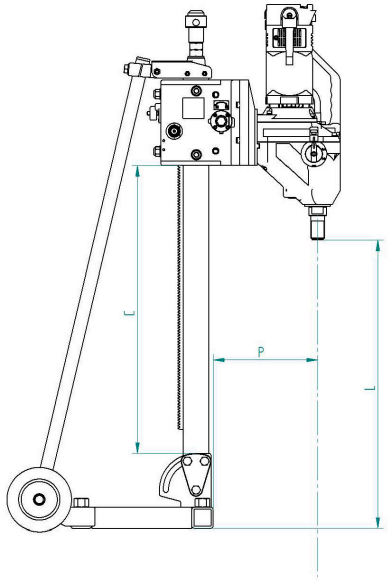

HELPFUL SIZES

CORE DRILL	SIZES, in		
	C	L	P
CARDI 183	22.72	22.83	4.33
CARDI 183-K	22.72	22.83*	4.33
CARDI 184-K	22.72	22.83*	5.51
CARDI 185	22.72	22.83	4.33
CARDI 187	22.72	22.83	5.51
CARDI 189	22.72	22.83	5.51
CARDI 202-K	9.21	10.20	4.33

* = without 502305 *(flush drilling device)*

ACCESSORIES SPACERS
WIDTH, in
1.18
1.18
1.18 *(supplied as standard)*
1.18
1.18 *(supplied as standard)*
1.18 *(supplied as standard)*
1.18

CODE	SPACER DESCRIPTION
506148	H = 1.18 in

CORE DRILL	SIZES, in		
	C	L	P
CARDI 200	22.72	22.32	5.12
CARDI 250	28.35	26.38	6.57
CARDI 306	25.79	25.2	7.68
CARDI 400	25.79	24.65	9.45
CARDI 500	25.79	23.62	10.67
CARDI 501	26.57	25.98	11.18
CARDI 205	25.79	24.96	8.90
CARDI 605	25.79	24.96	12.05
CARDI 606	26.57	27.32	12.56
CARDI 805	26.57	27.20	12.60
CARDI 1005	26.57	25.91	12.60

ACCESSORIES SPACERS
WIDTH, in
20 / 50 *(4 holes)*
0.79 / 1.77 / 2.36 / 3.15 / 4.33 *(6 holes)*
0.79 / 1.77 / 2.36 / 3.15 / 4.33 *(6 holes)*
0.79 / **1.77*** / 2.36 / 3.15 / 4.33 *(6 holes)*
0.79 / **1.77*** / 2.36 / 3.15 / 4.33 *(6 holes)*
0.79 / **1.77*** / 2.36 / 3.15 / 4.33 *(6 holes)*
0.79 / 1.77 / 2.36 / 3.15 / 4.33 *(6 holes)*
0.79 / 1.77 / 2.36 / **3.15*** / 4.33 *(6 holes)*
0.79 / 1.77 / 2.36 / **3.15*** / 4.33 *(6 holes)*
1.46* / 4.21
1.46* / 4.21

* = supplied as standard

CODE	SPACER DESCRIPTION
502545	H = 0.79" - 4 holes
502296	H = 1.97" - 4 holes

501899	H = 0.79" - 6 holes
501852	H = 1.77" - 6 holes
501654	H = 2.36" - 6 holes
506107	H = 3.15" - 6 holes
501634	H = 4.33" - 6 holes

506106	H = 1.46" CARDI 805 / 1005

506105	H = 4.21" CARDI 805 / 1005

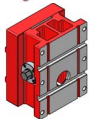

COMPACT CORE DRILL MOTORS

IDEAL FOR CONTRACTORS AND RENTAL MARKET

T1 200-EL

18 A - 3 speed
drilling up to Ø 8"

GFI in line · EL · SOFT START · AVS

compact, lightweight for indoor use on house power

T2 220-EL

20 A - 3 speed
drilling up to Ø 9"

GFI in line · EL · SOFT START · AVS

compact, lightweight, slim design with 20 A motor power

T4 300-EL

25 A - 2 speed
drilling up to Ø 12"

GFI-BOX in line · EL · SOFT START · AVS

two speed powerful drill motor for contractors and rental market

USERS

- general contractors, construction businesses;
- plumbers and heating systems fitters;
- electricians, fitters, installers;
- cutting & coring professionals in need of light weight and compact motors.

APPLICATIONS

- openings in walls and floors for installations (air, water, gas etc);
- holes for fitting and anchoring of guarrails, fences, railings;
- sampling of concrete cores for testing and verification;
- continuous drilling of considerable lenght.

TOTAL PROTECTION SYSTEM BY CARDI - ADVANTAGES

It consists in the combination of four functions, electronic and mechanical, which are able to work in synergy to ensure maximum protection for the operator and for the machine:

- **"CARDI Electronic Clutch" or electronic "load limiter":**
  -protects from overloads and prevents damages to the motor;
  - no break-down during your work and very limited service costs;
- **soft start (peaks limiter)**:
  - allows the machine to be plugged into a regular household outlet avoiding the intervention of the line protection automatic switches;
  - avoids tears on the anchoring system when starting the drill;
- **safety mechanical clutch:**
  - protects the operator in case of core bit stuck and suddendly stop;
  - avoids damages to the gearbox;
- **GFI in line** or **GFI-BOX in line** mounted as standard:
  - it protects the operator in case of electrical malfunction and lost of insulation;
  - it operates in the event that live parts come in contact with water;
- **"voltage drop" motor stop system :**
  - avoids unintentional restart in the event of drop/loss and coming back of the power;

TECHNICAL SPECIFICATIONS			T1 200-EL	T2 220-EL	T4 300-EL
CURRENT (110-120 V - 50/60 Hz)		A	18 (MAX 22)	20 (MAX 25)	25 (MAX 31)
R.P.M. IDLE / ON LOAD	GEAR 1°	r.p.m.	560 / 410	490 / 330	440 / 290
	GEAR 2°	r.p.m.	1,340 / 990	830 / 560	1,030 / 680
	GEAR 3°	r.p.m.	1,850 / 1,380	1,150 / 780	-------
DRILLING RANGE IN CONCRETE - WET		Ø	1"¼ - 8"	1"¼ - 9"	2" - 12"
BIT SPINDLE CONNECTION		---	1" ¼ UNC + 5/8"	1"1/4 UNC	1"1/4 UNC
WEIGHT		Kg/lb	7.3 / 16	9.5 / 21	12.5 / 28

PROFESSIONAL CORE DRILL MOTORS

FOR THE PROFESSIONALS' DAILY USE

T6 375-EL

25 A - 3 speed
drilling up to Ø 16"

GFI-BOX in line · EL · SOFT START · AVS

professional drill motor for daily use

T9 475-EL

25 A - 4 speed
drilling up to Ø 20"

GFI-BOX in line · EL · SOFT START · AVS

the most sold 4 speed motor, high torque for the professionals

VORTEX 625-EL

25 A - 6 speed
drilling up to Ø 24"

GFI-BOX in line · EL · SOFT START · AVS

the only 6 speed motor on the market largest rpm range for every professional's task

TECHNICAL SPECIFICATIONS			T6 375-EL	T9 475-EL	VORTEX 625
CURRENT (110-120 V - 50/60 Hz)		A	25 (MAX 31)	25 (MAX 31)	25 (MAX 31)
R.P.M. IDLE / ON LOAD	GEAR 1°	r.p.m.	310 / 200	260 / 170	210 / 140
	GEAR 2°	r.p.m.	700 / 460	500 / 330	340 / 220
	GEAR 3°	r.p.m.	1,300 / 860	810 / 540	480 / 320
	GEAR 4°	r.p.m.	-------	1,360 / 900	730 / 480
	GEAR 5°	r.p.m.	-------	-------	1,190 / 780
	GEAR 6°	r.p.m.	-------	-------	1,670 / 1,100
DRILLING RANGE IN CONCRETE - WET		Ø	1"¼ - 16"	¾" - 20"	1" - 24"
BIT SPINDLE CONNECTION		---	1"1/4 UNC	1"1/4 UNC	1"1/4 UNC
WEIGHT		Kg/lb	12.5 / 28	14.0 / 31	18.5 / 41

TWIN MOTOR CORE DRILLS

HEAVY DUTY

BM 805

50 A - 3 speed
drilling up to Ø 32"

GFI-BOX in line | EL | SOFT START | GFI

BM 1005

50 A - 4 speed
drilling up to Ø 40"

GFI-BOX in line | EL | SOFT START | GFI

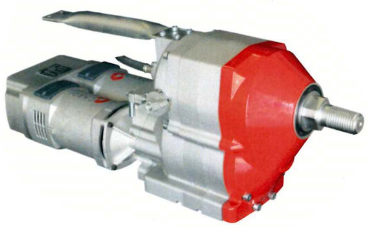

APPLICATIONS

- continuous drilling of high length and core drilling of large diameters;
- consolidation and securing of facilities and buildings;
- large openings for pipes and storm drains;
- sampling for testing and material verification and checks, at very high depth;

FEATURES

- **3 or 4 mechanical gears gearboxes, oil lubricated and oversized:** - they allow to provide higher torque and power to the core bit spindle, unlike the "gear-changers" that act electronically on the motor's rpm and which dissipate a large part of its power in the electronic device that controls the rpm reduction.

TOTAL PROTECTION SYSTEM BY CARDI - ADVANTAGES

It consists in the combination of most functions, electronic and mechanical, which are able to work in synergy to ensure maximum protection for the operator and for the machine.
The main integrated functions are:

- **"CARDI Electronic Clutch" :** - protects from overloads and prevents damages to the motor; - no break-down during your work and very limited service costs;
- **soft start (peaks limiter):** - at the motor start-up avoids peaks of power and hits to the fastening system and to the motor itself;
- **multidiscs mechanical clutch:** - engineered to support an intensive and heavy use; - it requires minimal maintenance thanks to its interaction in synergy with the "CARDI Electronic Clutch";
- **GFI-BOX (Ground Fault Interrupter):** - it protects the operator in case of electrical malfunction and lost of electrical insulation; - it operates in the unlucky event that live parts come into contact with water;
- **"voltage drop" motor stop system :** - avoids unintentional restart in the event of drop/loss and coming back of the power;

TECHNICAL SPECIFICATIONS			BM 805	BM 1005
CURRENT (110-120 V - 50/60 Hz)		A	50 (MAX 62)	50 (MAX 62)
R.P.M. IDLE / ON LOAD	GEAR 1°	r.p.m.	110 / 70	80 / 50
	GEAR 2°	r.p.m.	240 / 160	120 / 80
	GEAR 3°	r.p.m.	400 / 260	200 / 130
	GEAR 4°	r.p.m.	-------	290 / 190
DRILLING RANGE IN CONCRETE - WET		Ø	4" - 32"	6" - 40"
BIT SPINDLE CONNECTION		---	1"1/4 UNC	1"1/4 UNC
WEIGHT		Kg/lb	28 / 62	39 / 86

CORE DRILL STANDS

L 180

- alu compact anchor base
- extruded aluminum 2 x 2" ca.
- 45° tilting
- 60 mm collar connection
- max carriage run 22"¾
- core drill up to 8"
- weight 11 kg / 25 lb

SUGGESTED CORE DRILLS

- all the hand held core drills

L 180
Motor mount 60 mm collar

L 200 - L 250 - L 250 V - L 300 - L 300 V
Rapid-Lock motor mounting system

L 200

- alu compact anchor base
- extruded aluminum 2 x 2" ca.
- 45° tilting
- rapid-lock quick connection
- max carriage run 22"¾
- core drill up to 9"
- weight 11.6 kg / 26 lb

SUGGESTED CORE DRILL MOTORS

- T1 200-EL drilling up to 8" (w/o spacer)
- T2 200-EL drilling up to 9" (w/o spacer)

L 180 - L 200
Extruded Alu column 50x50 mm
Alu compact anchor base

L 180 - L 200 - L 250 - L 250 V - L 300 - L 300 V
Core bit stabilizer

L 250 / L 250 V

- L 250: alu anchor base
- L 250 V: alu combo base
- extruded aluminum 2 x 2" ca.
- 45° tilting
- rapid-lock quick connection
- max carriage run 28"¼
- core drill up to 10" (max 12")
- L 250: weight 16.3 kg / 36 lb
- L 250 V: weight 19.6 kg / 43 lb

SUGGESTED CORE DRILL MOTORS

- T2 200-EL drilling up to 9" (w/o spacer)
- T4 300-EL drilling up to 12" (w/o spacer)

L 250 - L 300
Aluminum compact anchor base
Wheels Included

L 300 - L 300 V - C 520 - C 600 - C 600-1500
Contrast tie-rod to be used with scaffold tube.

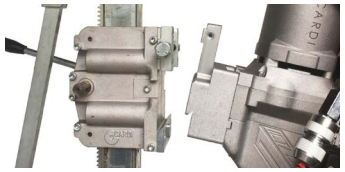

C 520
Dove-tail quick connection

C 520 - C 600 - C 600-1500
Heavy duty steel anchor base

C 600 - C 600-1500
CAM-LOCK quick connection motor to drill stand

SPACERS

501852	H = 45 mm
501654	H = 60 mm
506107	H = 80 mm

L 300 / L 300 V

- L 300: alu anchor base
- L 300 V: alu combo base
- steel column 2 x 2" ca.
- 45° tilting
- rapid-lock quick connection
- max carriage run 28"¼
- core drill up to 12"
- L 300: weight 19.3 kg / 43 lb
- L 300 V: weight 22.8 kg / 50 lb

SUGGESTED CORE DRILL MOTORS

- T4 300-EL drilling up to 12" (w/o spacer)

C 520

- heavy duty anchor steel base
- steel column 2 x 2" ca.
- roller carriage
- 45° tilting
- dove-tail quick connection
- max carriage run 25"¾
- core drill up to 20"
- weight 22.5 kg / 50 lb

SUGGESTED CORE DRILL MOTORS

- T6 375-EL drilling up to 16" (spacer 45 mm)
- T9 475-EL drilling up to 20" (spacer 45 mm)

C 600 / C 600-1500

- heavy duty anchor steel base
- steel column 2"½ x 2"½ ca.
- roller carriage
- 45° tilting
- CAM-LOCK quick connection
- C 600: max carriage run 26"½
- C 600-1500: max carriage run 46"¼
- core drill up to 24"
- C 600: weight 34 kg / 75 lb
- C 600-1500: weight 37.5 kg / 83 lb

SUGGESTED CORE DRILL MOTORS

- T9 475-EL drilling up to 20" (spacer 45 mm)
- VORTEX 625 drilling up to 24" (spacer 80 mm)

KIT 506259
X2R ASSEMBLY KIT

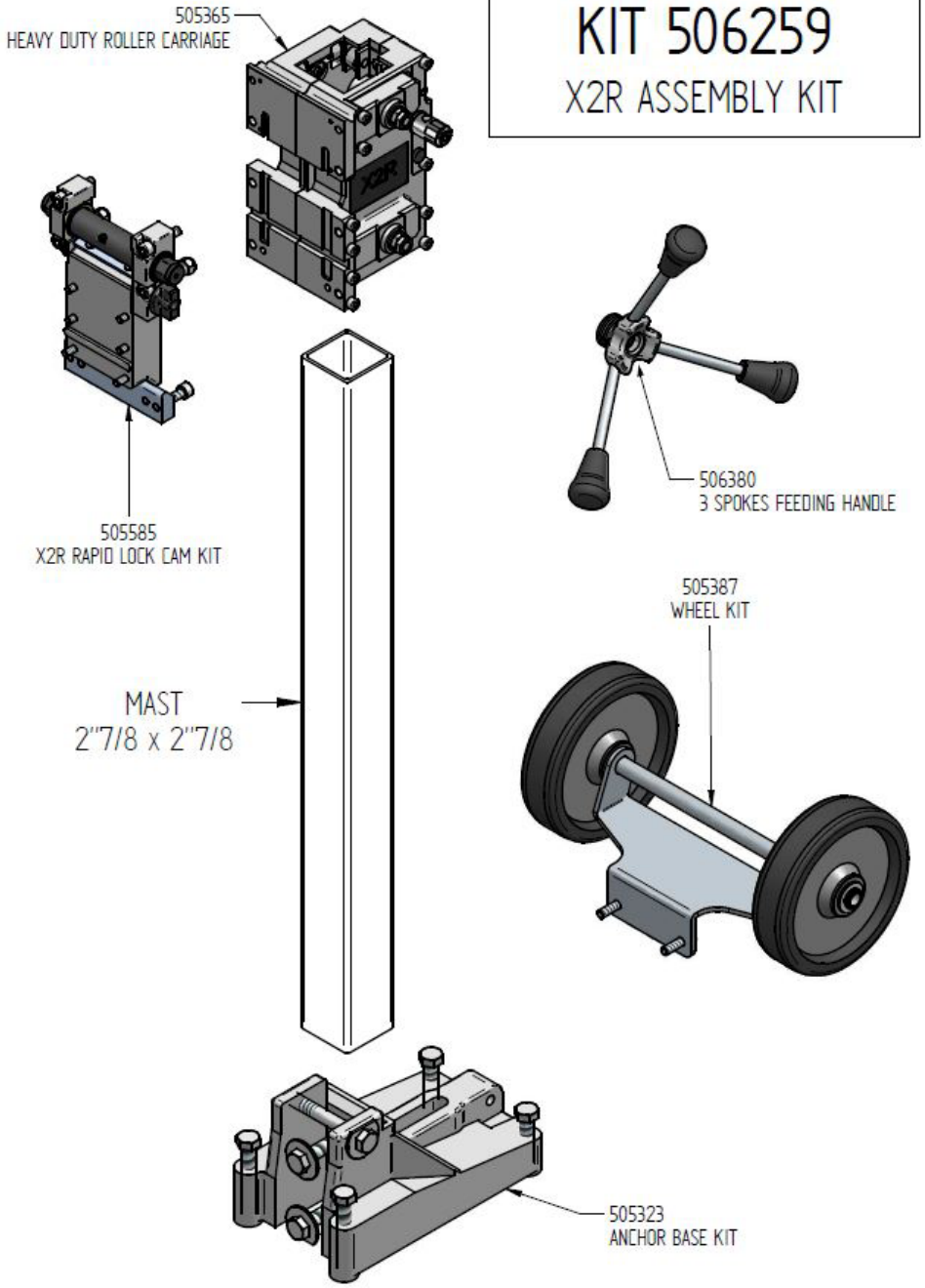

EXTRA-LONG COLUMN C 600-1500

Designed to use diamond bits and 40"-long extensions, for very deep drillings

ADVANTAGES

- **high reduction of working time** in case of drilling of high leng and/or continuous drilling
- **reduction of purchasing costs for the diamond core bits** and for the equipments for continuous drilling operations

C 600-1500	
SUITABLE FOR	ALL CARDI MOTORS

SEMI-AUTOMATIC FEEDING SYSTEM

230V AVAILABLE ONLY

The CARDI feeding-system powers the movement of the carriage on the column (mast), eliminating the operator's physical effort and fatigue; the system is controlled by a remote control panel that allows the selection of the right speed for the application

ADVANTAGES

- allows to work in total safety, because the operator is away from the drilling / cutting area, avoiding splashes of slurry and water
- allows the operator to avoid uncomfortable and tiring postures
- ensures a lower diamond wearing, which results in a longer life and optimization of the diamond tools
- enables faster drilling
- is compatible with all the CARDI professional drill stands and with the DA VINCI system

	SERVO 520	DA VINCI SERVO
SUITABLE FOR	C 520	C 600, C 600-1500, DA VINCI SYSTEM
SPECIFICATIONS	BRUSHLESS MOTOR 24V-150 W - CONTROL PANEL - REMOTE CONTROL	
MAX THRUST (FORCE)	600 Kg	

230 V AVAILABLE. 110-120 V NOT AVAILABLE

ACCESSORIES FOR CORE DRILLS

SCAFFOLD FIXING

WALL CLAMP FIXING

FLUSH TO THE WALL DRILLING (OR FLOOR) AND INTO THE CORNERS

CORE BIT EXTENSIONS 1" ¼ - ALUMINUM

CODE	USABLE LENGTH
501369	7" ¾
501370	11" ¾
502410	19" ¾

CORE BIT EXTENSIONS 1/2G - ALUMINUM

CODE	USABLE LENGTH
501376	7" ¾
501377	11" ¾
502423	19" ¾

CORE BIT EXTENSIONS M16 - STEEL

CODE	USABLE LENGTH
503134	11" ¾

CARDIFACILE - QUICK BIT UNSCREW DEVICE 1" ¼

CODE	COMPATIBILITY
506102	HAND-HELD CORE DRILLS
505355	ALL CARDI CORE DRILLS

BRASS RING FOR 1" ¼ CORE BITS
HIGH TICKNESS (4 mm / 0.16") AND LONG LIFE

CODE	COMPATIBILITY
501818	CORE DRILLS WITH 1"¼ SPINDLE

AXIAL GUIDE DEVICE FOR HAND-HELD DRILLING
FOR 1" ¼ CORE BITS

CODE	CORE DRILL SPINDLE
504840	1" ¼ + 1/2G
504841	1" ¼ + HOLE Ø 19mm

How to use the axial guide device:
- drill a hole into the material with a standard drill
- assemble the device on the machine
- use the hole to guide the core drilling

CORE BIT ADAPTERS

CODE	DESCRIPTION
503292	M18 (f) - 5/8 11 UNF (m)
503037	M18(f)-M16(m) hole diam. 8
503148	M18(f)-M16(m) hole diam. 10
501760	1/2G (m) - M16 (m)
501596	1/2G (m) - 5/8 16 UNF (m)
502741	1/2G (m) - 5/8 11 UNF (m)
501365	1/2G (m) - 1" ¼ UNC (m)
501367	1" ¼ UNC (f) - 1/2G (f)
506135	quick adaptor M16 for SDS PLUS bit
506134	SDS PLUS bit Ø12 L=260 mm

DUST EXTRACTION CHUCKS

CODE	DESCRIPTION
505560	1" ¼ (f) - 1" ¼ (m)
505561	M18 (f) - 1" ¼ (m)

DPT H COMPACT DUST EXTRACTOR 110-120 V

CODE	DESCRIPTION
DPT H COMPACT	DOUBLE MOTORS - H / HEPA CLASS DUST EXTRACTOR

- Power: **2.7 HP / 2.0 kW / 19 A** - double motors
- Max air flow: **211.9 cfm**
- **2 filters**: H / HEPA + M
- Filtration class: **H14/HEPA (99.995% D.O.P.) + M/PTFE**
- Filter surfaces: H/HEPA filter **1,728 in²**, M filter **930 in²**
- Other: **PTFE bag for dust collection, filter clogging warning light**
- Dimensions: 15" x 15" x 31"½
- Material, weight: **100% steel, 49 lb**
- Included accessories: hoses, floor cleaning acc.

VACUUM FIXING
FOR DRILLING MAX DIAMETER 9" ¾

CODE	DIMENSION
505066	VACUUM BASE KIT 10" x 10" (force ~300 kg)
505063	VACUUM BASE KIT 12" x 13" (force ~500 kg)

CODE	DESCRIPTION
PV 4-S (115V)	VACUUM PUMP WITH SAFETY TANK

MOTOR MOUNT PLATES

CODE	DESCRIPTION
505035	PLATE WITH COLLAR FOR HAND-HELD CORE DRILLS: DRILL STANDS L 160 - L 180
505036	PLATE WITH COLLAR FOR HAND-HELD CORE DRILLS: DRILL STANDS L 200-L 250-L 300
505040	4 HOLES MOTOR MOUNT PLATE FOR DRILL STAND: L 200
505039	6 HOLES MOTOR MOUNT PLATE FOR DRILL STANDS: L 250 - L 300
504870	6 HOLES MOTOR MOUNT PLATE FOR DRILL STAND: C 520
505936	6 HOLES MOTOR MOUNT PLATE FOR DRILL STANDS: C 600 - C 600-1500
505937	MOTOR MOUNT PLATE FOR CORE DRILL MODELS: CARDI 805 - CARDI 1005

SPACERS

CODE	DESCRIPTION
502545	H = 0.79" - 4 holes
502296	H = 1.97" - 4 holes
506148	H = 1.18" (L 160 - L 180)
506132	H = 1.18" + collar 60 mm (L 200 - L 250 - L 300)
501899	H = 0.79" - 6 holes
501852	H = 1.77" - 6 holes
501654	H = 2.36" - 6 holes
506107	H = 3.15" - 6 holes
501634	H = 4.33" - 6 holes
506106	H = 1.46" CARDI 805 / 1005
506105	H = 4.21" CARDI 805 / 1005

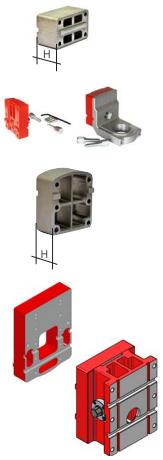

ANCHOR FIXING

CODE	DESCRIPTION
506260	WING FAS NUT
506250	PRO FAS NUT

PORTABLE WATER PUMP WITH 10 LITERS TANK

CODE **505812**

WATER COLLECTION KITS FOR CORE BITS MAX DIAMETER 5" ¾ AND 9" ¾

CODE	DRILL STAND MODELS	Ø
505062	L 160 - L 180 - L 200 - L 250 - L 300	9" ¾
503999	C 520 - C 600 - C 600-1500	9" ¾
501712	(spare rubber disc)	9" ¾
505061	L 160 - L 180 - L 200 - L 250 - L 300	5" ¾
501111	(spare rubber disc)	5" ¾

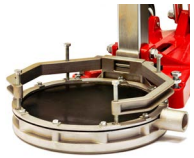

WALL CLAMP FIXING DEVICE

CODE **503183**

COMMON SPARE PARTS/ACCESSORIES

CODE	DESCRIPTION
504568	WATER HOSE KIT FOR CORE DRILLS
500101	ACQUA-STOP WATER HOSE CONNECTOR
506050	WATER INLET AND VALVE FOR -*ME* CORE DRILLS
504207	DUST EXTRACTOR CONNECTOR
502143	AUXILIARY HANDLE FOR HAND-HELD CORE DRILLS

ACCESSORY TO DRILL FLUSH TO THE WALL (OR FLOOR) AND INTO THE CORNERS

CODE **502305**

- compatible with all the CARDI hand-held core drills and with the drill motor T1 200-EL
- to be used with 1/2 G core bit
- flush drilling minimum diameter 1" ½
- core bit maximum diameter 3" ¼

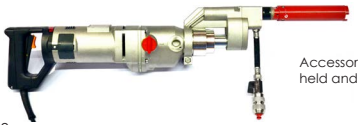

Accessory usable for both hand-held and on-stand drilling

SCAFFOLD FIXING ACCESSORIES

CODE	DRILL STAND MODEL
505064	L160 - L180 - L200 - L250 - L300
503160	C 520 - C 600 - C 600-1500

ELECTRIC HAND-HELD BLADE SAWS

PE 400
PE 401
TP 400
TP 400-FC
PE 350
PIRANHA 125

PE 400 ELECTRIC BLADE SAW
WET CUTTING ALSO FLUSH

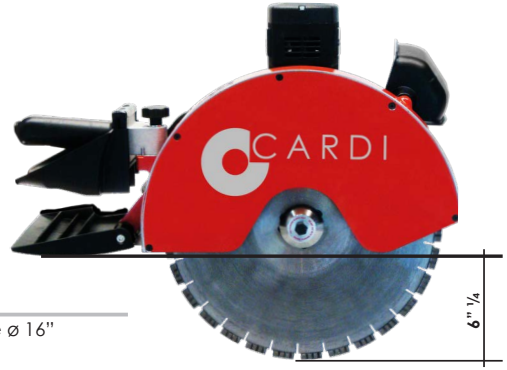

PE 400-BL

25 A - blade ø 16"
Wet cutting

PE 401 ELECTRIC BLADE SAW
DRY CUTTING WITH DUST EXTRACTION
WET CUTTING ALSO FLUSH

DUST FREE
EXTRACTION SYSTEM INTEGRATED

PE 401-BL

25 A - blade ø 16"
Dust Extraction included

TECHNICAL SPECIFICATIONS		PE 400-BL	PE 401-BL
CURRENT (110-120 V - 50/60 Hz)	A	25 (MAX 31)	
R.P.M. IDLE / ON LOAD	r.p.m.	2,540 / 1,670	
BLADE DIAMETER		16"	
BLADE ARBOR (diam.) / SUITABLE BLADE HOLE		1"	
MAXIMUM CUTTING DEPTH		6"¼ *(5"¼ with dust extraction)*	
FLANGE FOR FLUSH CUTTING IN WET		supplied as standard	
DUST EXTRACTION ACCESSORY (506152)		optional	supplied as standard
WEIGHT (without blade)	Kg/lb	13.0 / 29	14.5 / 32

DIAMOND BLADES	
DDT 400-SX	CARDI SPECIAL DIAMOND BLADE - *WET CUTTING and FLUSH CUTTING*
DDT 400	CARDI SPECIAL DIAMOND BLADE - *WET CUTTING and DRY CUTTING*

USERS

- general contractors, construction businesses, fitters
- cutting and coring professionals

APPLICATIONS

- door and window openings
- wall and floor cutting on masonry, concrete and reinforced concrete
- skylights installation
- concrete pipes cutting
- floor grooves and joints
- pavement slabs cutting

TOTAL PROTECTION SYSTEM BY CARDI - ADVANTAGES

It consists of a combination of different functions, both electronic and mechanical, working in synergy to ensure the highest level of protection for the operator and for the machine:

- **CARDI electronic clutch or electronic load limiter:**
  - protects from overloads and prevents damages to the motor
  - no breakdown during your work and very limited service costs
- **soft start (peaks limiter)**:
  - allows the machine to be plugged into a regular household outlet, avoiding the intervention of the line protection automatic switches
  - avoids peaks of power and tears on the arms when the cutting starts
- **PRCD - GFI** on the electrical cable:
  - protects in case of electrical malfunctioning and loss of insulation
  - operates in case of live parts coming into contact with water
  - avoids an unintentional restart in the event of drop/loss and coming back of power

DIAMOND BLADE DDT 400-SX

Supplied with the machine for wet cutting, it provides:

- higher penetration and cutting speed, with lower effort for the operator, thanks to thinner diamond segments than those found on the market
- reduced weight due to very thin but highly-resistant carbon steel core
- the possibility to cut flush to wall or floor

506152 - dust extraction accessory (PE 400)

DPT H COMPACT dust extractor

ADVANTAGES

- **the most powerful** on the market:
  - 25 A electrical motor at 110-120 V (31 A max)
- **great cutting depth:**
  - up to 6" ¼
- **for heavy-duty and professional use:** aluminum alloy to ensure high resistance and plastic, where necessary, to protect electrical parts
- **the innovative water injection system**, delivered through the center of the blade shaft and centrifuged to ensure:
  - **effective dust suppression system**, to further protect the operator's health
  - **lower consumption of water**, to minimize slurry in the working area
  - **uniform cooling of the diamond blade**, to avoid deformations, ensures longer lifetime for the diamonds and requires less cutting pressure from the operator
- **flush cut**: PE 400 can cut flush to the wall and to the floor, using the flush cut flange supplied with the machine and the included diamond blade **DDT 400-SX**
- **dry cutting:** PE 400 allows dry cutting using the dust extraction accessory and a specific blade; the accessory must be connected to a dust extractor, able to filter concrete dust (flush cutting not possible with the dust extraction accessory)
- **closer approach to the floor and the walls**, thanks to the switch-handle which can be rotated by 90°
- **extreme handling and balancing**, thanks to the innovative vertical position of the motor, unique for this kind of machines
- **easy straight cutting**: straight cuts can be performed very easily, using a common wood board
- **combination with DA VINCI system:** the PE 400 model can be mounted on the DA VINCI track system, allowing long linear cuts with no effort and optimizing the diamond blade wearing; Information about DA VINCI system are available in this catalog at pag. 38

CARDI super thin laser-welded diamond blade

Flush floor cutting

Wet cutting in reinforced concrete

Dry cutting in concrete blocks wall

Dry cutting in reinforced concrete

PE 400 ON DA VINCI SYSTEM

Making a vertical opening on a concrete wall

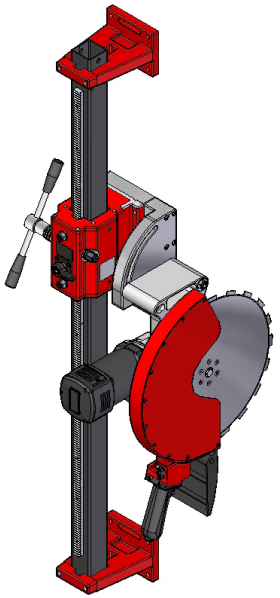

PE 400 mounted on DA VINCI SYSTEM

for diamond blades, see pag. 44

PE 350

ELECTRIC BLADE SAW
WET CUTTING

PE 350

20 A - blade ø 14"
cutting depth 5" ½

TECHNICAL SPECIFICATIONS		PE 350-BL
CURRENT (110-120 V - 50/60 Hz)	A	20 (MAX 25)
R.P.M. IDLE / ON LOAD	r.p.m.	3,040 / 2,260
BLADE DIAMETER		14"
MAXIMUM CUTTING DEPTH		5" ½
BLADE ARBOR (diam.) / SUITABLE BLADE HOLE		1"
WEIGHT (without blade)	Kg/lb	11.5 / 26

DIAMOND BLADE	
DDT 350-SX	SPECIAL CARDI DIAMOND BLADE - *WET CUTTING*

Cutting Depth regulation

90° rotatable handle

Self-supporting guide rollers

USERS

- general contractors, construction businesses, fitters
- cutting and coring professionals

APPLICATIONS

- door and window openings
- wall and floor cutting on masonry, concrete and reinforced concrete
- skylights installation
- concrete pipes cutting
- floor grooves and joints
- pavement slabs cutting

TOTAL PROTECTION SYSTEM BY CARDI - ADVANTAGES

It consists of a combination of different functions, both electronic and mechanical, working in synergy to ensure the highest level of protection for the operator and for the machine:

- **CARDI electronic clutch or electronic load limiter:**
  - protects from overloads and prevents damages to the motor
  - no breakdown during your work and very limited service costs
- **soft start (peaks limiter)**:
  - allows the machine to be plugged into a regular household outlet, avoiding the intervention of the line protection automatic switches
  - avoids peaks of power and tears on the arms when the cutting starts
- **PRCD - GFI** on the electrical cable:
  - protects in case of electrical malfunctioning and loss of insulation
  - operates in case of live parts coming into contact with water
  - avoids an unintentional restart in the event of drop/loss and coming back of power

DIAMOND BLADES
DDT 350-SX, DDT 400-SX

Supplied with the machine for wet cutting, it provides:

- higher penetration and cutting speed, with lower effort for the operator, thanks to thinner diamond segments than those found on the market
- reduced weight due to very thin but highly-resistant carbon steel core
- the possibility to perform flush cutting, by using a DDT 400-SX blade mounted on the TP 400-FC

for diamond blades, see pag. 44

ADVANTAGES

- **high power:**
  - 20 A electric motor at 110-120 V (25 A max)
- **great cutting depth:**
  - TP400 / TP400-FC: up to 6" ¼
  - PE 350: up to 5" ½
- **the innovative water injection system**, delivered through the center of the blade shaft and centrifuged to ensure:
  - **effective dust suppression system**, to further protect the operator's health
  - **lower consumption of water**, to minimize slurry in the working area
  - **uniform cooling of the diamond blade**, to avoid deformations, ensures longer lifetime for the diamonds and requires less cutting pressure from the operator
- **flush cut**: TP 400-FC can cut flush to the wall and to the floor, using the flush cut flange supplied with the machine and the included diamond blade **DDT 400-SX**
- **PE 350: closer approach to the floor and the walls**, thanks to the switch-handle which can be rotated 90°
- **PE 350: extreme handling and balancing,** thanks to the innovative vertical position of the motor, unique for this kind of machines
- **easy straight cutting:** straight cuts can be performed very easily, using a common wood board

for diamond blades, see pag. 44

TP 400

ELECTRIC BLADE SAW
WET CUTTING

TP400-FC

ELECTRIC BLADE SAW
WET CUTTING

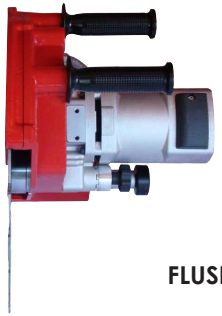

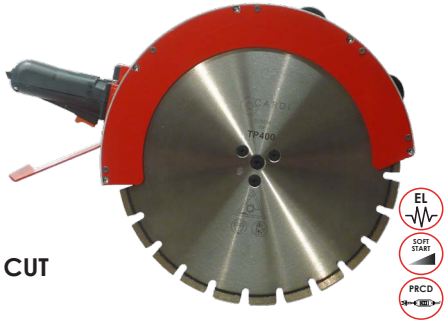

FLUSH CUT

TECHNICAL SPECIFICATIONS		TP 400-BL	TP 400-FC-BL
CURRENT (110-120 V - 50/60 Hz)	A	20 (MAX 23.5)	
R.P.M. IDLE / ON LOAD	r.p.m.	2,450 / 1,930	
BLADE DIAMETER		16"	
MAXIMUM CUTTING DEPTH		6" ¼	
BLADE ARBOR (diam.) / SUITABLE BLADE HOLE		1"	
FLUSH CUT		----	POSSIBLE
WEIGHT (without blade)	Kg/lb	13.0 / 29	12.5 / 28

DIAMOND BLADES and ACCESSORIES	
DDT 400-SX	CARDI SPECIAL DIAMOND BLADE - *WET CUTTING and FLUSH CUTTING*
504954	FLUSH CUT ACCESSORY (it transforms TP 400 in TP 400-FC)

PIRANHA 125-SX

WALL CHASER - DRY CUTTING
WITH DUST EXTRACTION SYSTEM

TECHNICAL SPECIFICATIONS		PH 125-SX
CURRENT (110-120 V - 50/60 Hz)	A	15 (MAX 18)
R.P.M. IDLE / ON LOAD	r.p.m.	8,270 / 6,530
DIAMOND BLADE (quantity and diameter)		2 X 5" (125 mm)
GROOVE MAXIMUM WIDTH	in	1" ⅝
GROOVE MAXIMUM DEPTH	in	1" ½
BLADE ARBOR (diam.) / SUITABLE BLADE HOLE	in	⅞"
WEIGHT (without blades)	Kg/lb	4.6 / 10

Plastic case

DPT H COMPACT
dust extractor

Vacuum cleaner connection

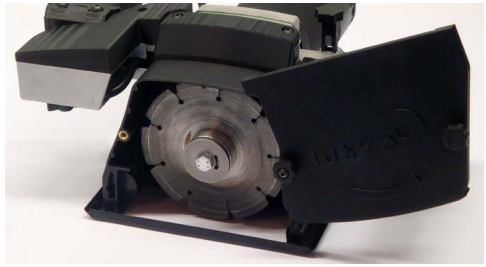

Blades cover detail

FEATURES

The CARDI wall chaser PIRANHA 125-SX is designed to make grooves in concrete, masonry, brick or any other similar building material

You can work in dry conditions, safely and with little effort

Its powerful electric motor provides enough power to work even in reinforced concrete

The built-in dust extraction system enables dust-free cutting. It is compatible with common dust extractors

PH 125-SX is an ideal tool for:

- plumbers
- electricians
- fitters (e.g., installers of telephone and internet lines)

TOTAL PROTECTION SYSTEM BY CARDI - ADVANTAGES

It consists of a combination of different functions, both electronic and mechanical, working in synergy to ensure the highest level of protection for the operator and for the machine:

- **CARDI electronic clutch or electronic load limiter:**
  - protects from overloads and prevents damages to the motor
  - no breakdown during your work and very limited service costs
- **soft start (peaks limiter)**:
  - allows the machine to be plugged into a regular household outlet, avoiding the intervention of the line protection automatic switches
  - avoids peaks of power and tears on the arms when the cutting starts

for diamond blades, see pag. 44

DIAMOND CHAINSAWS

COCCODRILLO35

ALLIGATORE18

ALLIGATORE22

DA VINCI SYSTEM

DV CD35-1500

DV AL22-1500

DV PE400-1500

DV SD-1500

CD35.35

ELECTRIC DIAMOND CHAINSAW
WET CUTTING OF CONCRETE AND MASONRY

TECHNICAL SPECIFICATIONS		CD35.35
CURRENT (110-120 V - 50/60 Hz)	A	25 (MAX 31)
R.P.M. IDLE / ON LOAD	r.p.m.	8,300 / 5,480
CUTTING DEPTH		16"
PROTECTION AND SAFETY SYSTEMS		TOTAL PROTECTION SYSTEM BY CARDI
CHAIN LUBRICATION AND DIAMOND COOLING FLUID		WATER
WEIGHT BAR and CHAIN INCLUDED	Kg/lb	9.0 / 20

BAR35: SPARE GUIDE BAR
CHAIN35: SPARE DIAMOND CHAIN
505399: 8-SEGMENT DRIVE SPROCKET

COCCODRILLO35

The COCCODRILLO35 is the first chainsaw powered by a single-phase electrical motor, able to cut, in wet conditions, concrete, stone, masonry, bricks and other building materials in general

It was developed to meet a specific need of the general contractors: having a versatile power-tool to perform cutting of openings, widening of doors and windows, cutting of blocks, cutting of curbs etc.

The diamond chainsaw can be used hand-held or can be mounted on the DA VINCI linear cutting system, to obtain straight and precise cuttings with limited effort

You can find the DA VINCI system in this catalogue on page 37

TOTAL PROTECTION SYSTEM BY CARDI - ADVANTAGES

It consists of a combination of different functions, both electronic and mechanical, working in synergy to ensure the highest level of protection for the operator and machine:

- **CARDI electronic clutch or electronic load limiter:**
  - protects from overloads and prevents damages to the motor
  - no breakdown during your work and very limited service costs
- **soft start (peaks limiter)**:
  - allows the machine to be plugged into a regular household outlet, avoiding the intervention of the line protection automatic switches
  - avoids peaks of power and tears on the arms when the cutting starts
- **PRCD - GFI** on the electrical cable:
  - protects in case of electrical malfunctioning and loss of insulation
  - operates in case of live parts coming into contact with water
  - avoids an unintentional restart in the event of drop/loss and coming back of power

ADVANTAGES

Why choose CARDI electric concrete chainsaw?

- **it is suitable for any working environment**, particularly indoors, because it does not produce exhaust fumes
- **it is safer and cleaner** than gas or hydraulic saws: it does not require any gasoline or oil
- **it is light and easy to handle**, weighting only 9 kg (20 lb), including bar and chain: no extra weight to be addesd, as hydraulic power units, fuel tanks, etc.
- **it can be used on a simple household socket** with in-house civil electrical lines: the power available from the net is sufficient
- **it cuts up to 16" deep**
- **it needs limited maintenance**
- **it has no issues in restarting after long stops**, as opposed to gas-powered machines
- **it has a strong and powerful electric motor**, suitable for common cutting tasks
- **it is cheaper and has lower operating cost** than comparable gas, hydraulic and pneumatic saws
- **it allows to work in tiny spaces**, where other machines cannot access to
- **it allows to do corner cuts**, eliminating the wasteful overcuts that unavoidable when using blade saws
- **it allows to complete works on your own**, which used to need professional cutting companies
- **it has an innovative and functional design**, with a perfect distribution of weight

For all these reasons, COCCODRILLO35 is the easy-to-use machine that makes you save costs, time and effort.

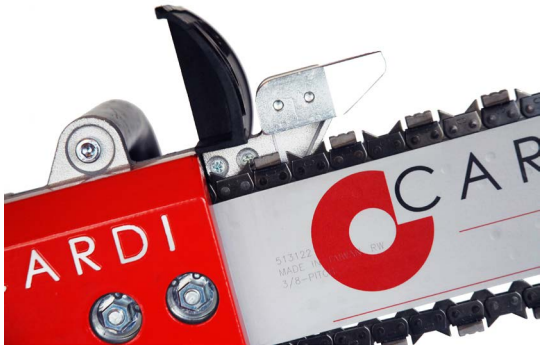

AL18.43

ELECTRIC CHAINSAW - DRY CUTTING OF BLOCKS

230 V AVAILABLE ONLY

ANTI STRETCH SYSTEM

TECHNICAL SPECIFICATIONS		AL18.43
POWER (230 V)	W	2,000 (MAX 2,550)
R.P.M. IDLE / ON LOAD	r.p.m.	2,580 / 1,760
BAR and HARD METAL CHAIN		lenght 43 cm / 17"
PROTECTION AND SAFETY SYSTEMS		SAFETY BRAKE + TOTAL PROTECTION SYSTEM BY CARDI
CHAIN LUBRICATION FLUID		CHAINSAW OIL
CHAIN ANTI STRETCH SYSTEM		EQUIPPED
WEIGHT BAR and CHAIN INCLUDED	Kg/lb	10 / 22

cod. BAR43: GUIDE BAR
cod. CHAIN43: HARD METAL CHAIN
505290: 7-SEGMENT DRIVE SPROCKET

AL22.43 / AL22.53

ELECTRIC CHAINSAW - DRY CUTTING OF BLOCKS

230 V AVAILABLE ONLY

ANTI STRETCH SYSTEM

TECHNICAL SPECIFICATIONS		AL22.43	AL22.53
POWER (230 V)	W	2,200 (MAX 2,600)	
R.P.M. IDLE / ON LOAD	r.p.m.	2,520 / 1,800	
BAR and HARD METAL CHAIN		lenght 43 cm / 17"	lenght 53 cm / 21"
PROTECTION AND SAFETY SYSTEMS		SAFETY BRAKE + TOTAL PROTECTION SYSTEM BY CARDI	
CHAIN LUBRICATION FLUID		CHAINSAW CHAIN OIL	
CHAIN ANTI STRETCH SYSTEM		EQUIPPED	
WEIGHT BAR and CHAIN INCLUDED	Kg/lb	10.5 / 23.1	10.7 / 23.6

GUIDE BAR	cod. BAR43 - 17"	cod. BAR53 - 21"
HARD METAL CHAIN	cod. CHAIN43 - 17"	cod. CHAIN53 - 21"
7-SEGMENT DRIVE SPROCKET	505290	

ALLIGATORE

The electric chainsaw ALLIGATORE is a machine designed for dry cutting with an hard metal chain (Widia). It is the perfect chainsaw to cut bricks and light constructiong materials during the building phase

Fast, precise, lightweight and easy-to-use, the Alligatore is an essential tool for the construction site

The ALLIGATORE can be used, combined with the DA VINCI system, to obtain linear and precise cuts with no effort

You can find the DA VINCI system in this catalogue on page 37

ADVANTAGES

- **It allows to make cuts directly in the working area where the wall is being built**, avoiding to move the blocks to the table saw
- **It allows to cut blocks** of significant size
- **It is suitable to cut** blocks and bricks made of: clay, poroton, tuff, aerated clay, aerated concrete, etc.
- **It is equipped with the CARDI ANTI STRETCH SYSTEM** , developed to minimize the annoying phenomenon of chain stretching, which usually results in significant delays and inconveniences for the operator
- **It is endowed with an oil pump and an oil tank**, needed to ensure optimal chain lubrication and to reduce the friction between bar and chain

TOTAL PROTECTION SYSTEM BY CARDI - ADVANTAGES

It consists of a combination of different functions, both electronic and mechanical, working in synergy to ensure the highest level of protection for the operator and machine:

- **CARDI electronic clutch or electronic load limiter:**
  - protects from overloads and prevents damages to the motor
  - no breakdown during your work and very limited service costs
- **soft start (peaks limiter)**:
  - allows the machine to be plugged into a regular household outlet, avoiding the intervention of the line protection automatic switches
  - avoids peaks of power and tears on the arms when the cutting starts
- **safety chain brake:**
  - immediately stops the rotation of the chain in case of emergency

DV CD35-1500

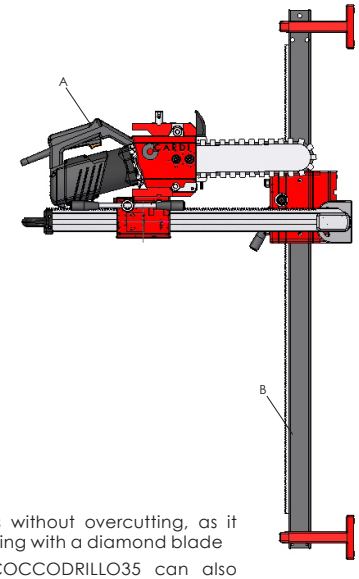

Diamond chain wet cutting system	DV CD35-1500
ELECTRIC DIAMOND CHAINSAW POWERHEAD (A)	CD35.35
MAXIMUM CUTTING DEPTH	16"
MAIN TRACK (B) LENGTH	59"
USABLE CUTTING LENGTH	47"¼
CURRENT (110-120 V - 50/60 Hz)	25 (MAX 31)

The DA VINCI cutting system **DV CD35-1500** allows to:

- cut concrete walls, concrete blocks, stone, bricks, cinder blocks and all the construction materials in general
- perform 16"-deep cuts
- cut walls, floors, window and door openings, enlargement of existing openings, deep niches and wall-saws corner cuts
- realize square cuts without overcutting, as it happens when cutting with a diamond blade
- the powerhead COCCODRILLO35 can also be used hand-held to cut stones, bricks, concrete blocks, etc. or for finishing works. More information are available at page 33

DV PE400-1500

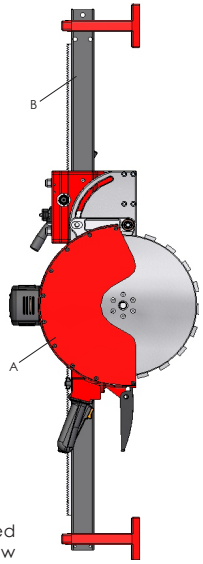

Diamond blade saw wet cutting system	DV PE400-1500
ELECTRIC BLADE SAW POWERHEAD (A)	PE 400-BL
MAXIMUM CUTTING DEPTH	6" ¼
MAIN TRACK (B) LENGTH	59"
USABLE CUTTING LENGTH	47"¼
CURRENT (110-120 V - 50/60 Hz)	25 (MAX 31)

The DA VINCI cutting system **DV PE 400-1500** allows to:

- cut all the construction materials on the market, in particular: concrete, masonry, concrete blocks, stone, reinforced concrete, etc.
- perform 6" ¼-deep cuts
- cut interior walls to create window and door openings and enlargements of exhisting openings
- perform flush cuts
- the powerhead PE 400 can also be used hand-held as a blade saw and cut-off saw for bricks, blocks, concrete and reinforced concrete or for finishing works. More information available at page 27

DV AL22-1500 230 V AVAILABLE ONLY

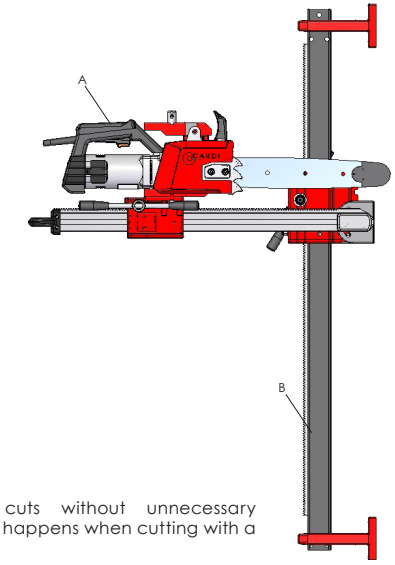

Carbide tipped chain dry cutting system	DV AL22-1500
ELECTRIC CARBIDE DRY CHAINSAW POWERHEAD (A)	AL22.53
MAXIMUM CUTTING DEPTH	53 cm / 21"
MAIN TRACK (B) LENGTH	59"
USABLE CUTTING LENGTH	47"¼
POWER - (230 V - 50/60 Hz)	2,200 (MAX 2,600)

The DA VINCI cutting system **AL 22-1500** allows to:

- cut construction materials as: abrasive materials in general, clay bricks full and hollow, poroton, tuff, gasbeton, limeston, etc.
- perform 21"-deep cuts
- cut interior walls to create window and door openings, enlargements of exhisting openings
- realize square cuts without unnecessary overcuttings, as it happens when cutting with a diamond blade
- the powerhead ALLIGATORE22 can also be used hand-held to cut bricks, blocks, etc. or for finishing works. More information are available at page 35

DV SD

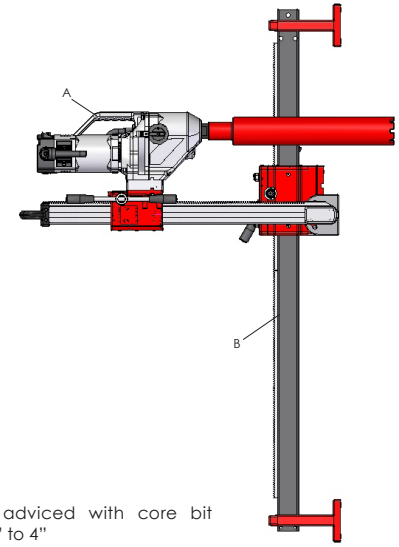

Stitch drilling systems	DV SD-1500 *without drill motor*	DV SD-1501 *drill motor included*	DV SD-1504 *drill motor included*
MAIN TRACK (B) LENGTH	59"		
USABLE CUTTING LENGTH	47"¼		
DRILL MOTOR MODEL (A)	---------	T1 200-EL - *3 speed*	T4 300-EL - *2 speed*
MOTOR CURRENT (110-120 V-50/60 Hz)	-----	18 (MAX 22)	25 (MAX 31)
DRILLING DIAMETER IN CONCRETE	max 6"	max 4"	max 6"

The stitch drilling system **DV SD** allows to:

- obtain openings in the walls by using the stitch drilling tecnique, that is making a series of in-line drills
- drill 1-m-deep drillings by using a standard core bit and a core bit extension
- stitch drilling is adviced with core bit diameters from 3" to 4"

DV CD35-1500

Finishing of a vertical cut in a reinforced concrete wall, going flush to the floor, with the DV CD35-1500

DV CD35-1500

Flush cutting in a reinforced concrete wall with the DV CD35-1500

DV PE400-1500

Cutting a reinforced concrete wall with the DV PE400-1500

DV CD35-1500

Cutting with the DV CD35-1500 using the semi-automatic feeding system DA VINCI SERVO (available only at 230 V)

DIAMOND CORE BITS

CARDI DIAMOND CORE BITS

DIAMOND CORE BITS FOR GRANITE-STONE-MARBLE
CONNECTION 1/2G - LENGTH 4"

DIAMETERS mm	DIAMETERS in	SEGMENTS # x L - W - H, mm	SEGMENTS # x L - W - H, in	CODE
35	1.38	4 x 20 - 2.5 - 9	4 x 0.79 - 0.10 - 0.35	CDP 035
40	1.57	4 x 24 - 2.5 - 9	4 x 0.94 - 0.10 - 0.35	CDP 040
45	1.77	4 x 27 - 2.5 - 9	4 x 1.06 - 0.10 - 0.35	CDP 045
50	1.97	5 x 24 - 2.5 - 9	5 x 0.94 - 0.10 - 0.35	CDP 050
60	2.36	6 x 24 - 2.5 - 9	6 x 0.94 - 0.10 - 0.35	CDP 060
70	2.76	6 x 24 - 2.8 - 9	6 x 0.94 - 0.11 - 0.35	CDP 070
80	3.15	7 x 24 - 2.8 - 9	7 x 0.94 - 0.11 - 0.35	CDP 080
90	3.54	8 x 24 - 2.8 - 9	8 x 0.94 - 0.11 - 0.35	CDP 090
100	3.94	9 x 24 - 3.3 - 9	9 x 0.94 - 0.13 - 0.35	CDP 100
120	4.72	9 x 24 - 3.3 - 9	9 x 0.94 - 0.13 - 0.35	CDP 120

DRY DRILLING CORE BITS
CONNECTION M16 - USABLE LENGTH 6" - LASER-WELDED SEGMENTS

DIAMETERS mm	DIAMETERS in	SEGMENTS # x L - W - H, mm	SEGMENTS # x L - W - H, in	CODE
32	1.26	3 x 17 - 3.8 - 8	3 x 0.67 - 0.15 - 0.31	CDS 032-M16
42	1.65	3 x 20 - 3.8 - 8	3 x 0.79 - 0.15 - 0.31	CDS 042-M16
52	2.05	3 x 24 - 3.8 - 8	3 x 0.94 - 0.15 - 0.31	CDS 052-M16
62	2.44	3 x 24 - 3.8 - 8	3 x 0.94 - 0.15 - 0.31	CDS 062-M16
68	2.68	3 x 24 - 3.8 - 8	3 x 0.94 - 0.15 - 0.31	CDS 068-M16
72	2.83	4 x 24 - 3.8 - 8	4 x 0.94 - 0.15 - 0.31	CDS 072-M16
82	3.23	4 x 24 - 3.8 - 8	4 x 0.94 - 0.15 - 0.31	CDS 082-M16
92	3.62	4 x 24 - 3.8 - 8	4 x 0.94 - 0.15 - 0.31	CDS 092-M16
102	4.02	5 x 24 - 3.8 - 8	5 x 0.94 - 0.15 - 0.31	CDS 102-M16
112	4.41	5 x 24 - 3.8 - 8	5 x 0.94 - 0.15 - 0.31	CDS 112-M16
122	4.80	6 x 24 - 3.8 - 8	6 x 0.94 - 0.15 - 0.31	CDS 122-M16
127	5.00	6 x 24 - 3.8 - 8	6 x 0.94 - 0.15 - 0.31	CDS 127-M16
132	5.20	6 x 24 - 4.3 - 8	6 x 0.94 - 0.17 - 0.31	CDS 132-M16
142	5.59	6 x 24 - 4.3 - 8	6 x 0.94 - 0.17 - 0.31	CDS 142-M16
152	5.98	6 x 24 - 4.3 - 8	6 x 0.94 - 0.17 - 0.31	CDS 152-M16
162	6.38	7 x 24 - 4.3 - 8	7 x 0.94 - 0.17 - 0.31	CDS 162-M16
182	7.17	7 x 24 - 4.3 - 8	7 x 0.94 - 0.17 - 0.31	CDS 182-M16
202	7.95	7 x 24 - 4.3 - 8	7 x 0.94 - 0.17 - 0.31	CDS 202-M16

- Abrasive materials
- Clay bricks full and hollow
- Poroton
- Gasbeton
- Concrete blocks
- Masonry
- Non-reinforced concrete
- Light reinforced concrete
- Tuff

DRY DRILLING CORE BITS FOR DUST EXTRACTION
CONNECTION 1" ¼ - USABLE LENGTH 10"- LASER-WELDED SEGMENTS

DIAMETERS mm	DIAMETERS in	SEGMENTS # x L - W - H, mm	SEGMENTS # x L - W - H, in	CODE
42	1.65	3 x 20 - 0.15 - 8	3 x 0.79 - 0.15 - 0.31	CDS 042
52	2.05	3 x 0.94 - 3.8 - 8	3 x 0.94 - 0.15 - 0.31	CDS 052
57	2.24	3 x 24 - 3.8 - 8	3 x 0.94 - 0.15 - 0.31	CDS 057
62	2.44	3 x 24 - 3.8 - 8	3 x 0.94 - 0.15 - 0.31	CDS 062
68	2.68	3 x 24 - 3.8 - 8	3 x 0.94 - 0.15 - 0.31	CDS 068
72	2.83	4 x 24 - 3.8 - 8	4 x 0.94 - 0.15 - 0.31	CDS 072
82	3.23	4 x 24 - 3.8 - 8	4 x 0.94 - 0.15 - 0.31	CDS 082
92	3.62	4 x 24 - 3.8 - 8	4 x 0.94 - 0.15 - 0.31	CDS 092
102	4.02	5 x 24 - 3.8 - 8	5 x 0.94 - 0.15 - 0.31	CDS 102
112	4.41	5 x 24 - 3.8 - 8	5 x 0.94 - 0.15 - 0.31	CDS 112
122	4.80	6 x 24 - 3.8 - 8	6 x 0.94 - 0.15 - 0.31	CDS 122
127	5.00	6 x 24 - 3.8 - 8	6 x 0.94 - 0.15 - 0.31	CDS 127
132	5.20	6 x 24 - 4.3 - 8	6 x 0.94 - 0.17 - 0.31	CDS 132
142	5.59	6 x 24 - 4.3 - 8	6 x 0.94 - 0.17 - 0.31	CDS 142
152	5.98	6 x 24 - 4.3 - 8	6 x 0.94 - 0.17 - 0.31	CDS 152
162	6.38	7 x 24 - 4.3 - 8	7 x 0.94 - 0.17 - 0.31	CDS 162
182	7.17	7 x 24 - 4.3 - 8	7 x 0.94 - 0.17 - 0.31	CDS 182
202	7.95	7 x 24 - 4.3 - 8	7 x 0.94 - 0.17 - 0.31	CDS 202

- Abrasive materials
- Clay bricks full and hollow
- Concrete blocks
- Non-reinforced concrete
- Light reinforced concrete
- Poroton
- Gasbeton
- Masonry
- Tuff

CARDI DIAMOND CORE BITS

WET DRILLING CORE BITS
CONNECTION 1/2 G - USABLE LENGTH 12" - LASER-WELDED RING

DIAMETERS mm	DIAMETERS in	RING W - H, mm	RING W - H, in	CODE
12	0.47	2.0 - 10	0.08 - 0.39	CDU 012-G
14	0.55	2.0 - 10	0.08 - 0.39	CDU 014-G
15	0.59	2.5 - 10	0.10 - 0.39	CDU 015-G
16	0.63	2.5 - 10	0.10 - 0.39	CDU 016-G
18	0.71	2.5 - 10	0.10 - 0.39	CDU 018-G
20	0.79	2.5 - 10	0.10 - 0.39	CDU 020-G
22	0.87	2.5 - 10	0.10 - 0.39	CDU 022-G
24	0.94	2.5 - 10	0.10 - 0.39	CDU 024-G
25	0.98	2.5 - 10	0.10 - 0.39	CDU 025-G
26	1.02	2.5 - 10	0.10 - 0.39	CDU 026-G
28	1.10	2.5 - 10	0.10 - 0.39	CDU 028-G
30	1.18	2.5 - 10	0.10 - 0.39	CDU 030-G
32	1.26	2.5 - 10	0.10 - 0.39	CDU 032-G
35	1.38	3.0 - 10	0.12 - 0.39	CDU 035-G
38	1.50	3.0 - 10	0.12 - 0.39	CDU 038-G
40	1.57	3.0 - 10	0.12 - 0.39	CDU 040-G
42	1.65	3.5 - 10	0.14 - 0.39	CDU 042-G
52	2.05	3.5 - 10	0.14 - 0.39	CDU 052-G

- Abrasive materials
- Clay bricks full and hollow
- Concrete blocks
- Non-reinforced concrete
- Reinforced concrete
- Poroton
- Masonry

- Available on request: core bits for granite and stone

WET DRILLING CORE BITS - USABLE ALSO IN DRY
CONNECTION 1" ¼ - USABLE LENGTH 17" - LASER-WELDED SEGMENTS

DIAMETERS mm	DIAMETERS in	SEGMENTS # x L - W - H, mm	SEGMENTS # x L - W - H, in	CODE
42	1.65	4 x 20 - 3.5 - 9	5 x 0.79 - 0.14 - 0.35	
52	2.05	5 x 24 - 3.5 - 11	5 x 0.94 - 0.14 - 0.43	CDU 052
62	2.44	6 x 24 - 3.5 - 11	6 x 0.94 - 0.14 - 0.43	CDU 062
72	2.83	7 x 24 - 3.5 - 11	7 x 0.94 - 0.14 - 0.43	CDU 072
82	3.23	7 x 24 - 3.5 - 11	7 x 0.94 - 0.14 - 0.43	CDU 082
92	3.62	8 x 24 - 3.5 - 11	8 x 0.94 - 0.14 - 0.43	CDU 092
102	4.02	9 x 24 - 3.5 - 11	9 x 0.94 - 0.14 - 0.43	CDU 102
112	4.41	9 x 24 - 3.5 - 11	9 x 0.94 - 0.14 - 0.43	CDU 112
122	4.80	10 x 24 - 4.0 - 11	10 x 0.94 - 0.16 - 0.43	CDU 122
127	5.00	10 x 24 - 4.0 - 11	10 x 0.94 - 0.16 - 0.43	CDU 127
132	5.20	10 x 24 - 4.0 - 11	10 x 0.94 - 0.16 - 0.43	CDU 132
142	5.59	10 x 24 - 4.0 - 11	10 x 0.94 - 0.16 - 0.43	CDU 142
152	5.98	12 x 24 - 4.0 - 11	12 x 0.94 - 0.16 - 0.43	CDU 152
162	6.38	13 x 24 - 4.0 - 11	13 x 0.94 - 0.16 - 0.43	CDU 162
172	6.77	13 x 24 - 4.0 - 11	13 x 0.94 - 0.16 - 0.43	CDU 172
182	7.17	14 x 24 - 4.0 - 11	14 x 0.94 - 0.16 - 0.43	CDU 182
192	7.56	14 x 24 - 4.0 - 11	14 x 0.94 - 0.16 - 0.43	CDU 192
200	7.87	15 x 24 - 4.0 - 11	15 x 0.94 - 0.16 - 0.43	CDU 200
225	8.86	16 x 24 - 4.5 - 11	16 x 0.94 - 0.18 - 0.43	CDU 225
250	9.84	17 x 24 - 4.5 - 11	17 x 0.94 - 0.18 - 0.43	CDU 250
300	11.81	22 x 20 - 5.0 - 11	22 x 0.79 - 0.20 - 0.43	CDU 300

- Abrasive materials
- Clay bricks full and hollow
- Concrete blocks
- Non-reinforced concrete
- Reinforced concrete
- Poroton
- Masonry

- Available on request: granite and hard stone core bits

WET DRILLING CORE BITS
CONNECTION 1" ¼ - USABLE LENGTH 17" - BRASED WELDED SEGMENTS

DIAMETERS mm	DIAMETERS in	SEGMENTS # x L - W - H, mm	SEGMENTS # x L - W - H, in	CODE
350	13.78	22 x 24 - 5.0 - 11	22 x 0.94-0.20-0.43	CDU 350-HD
400	15.75	24 x 24 - 5.0 - 11	24 x 0.94-0.20-0.43	CDU 400-HD
450	17.72	24 x 24 - 5.0 - 11	24 x 0.94-0.20-0.43	CDU 450-HD
500	19.69	26 x 24 - 5.0 - 11	26 x 0.94-0.20-0.43	CDU 500-HD
550	21.65	26 x 24 - 5.0 - 11	26 x 0.94-0.20-0.43	CDU 550-HD
600	23.62	28 x 24 - 5.0 - 11	28 x 0.94-0.20-0.43	CDU 600-HD

- Abrasive materials
- Clay bricks full and hollow
- Concrete blocks
- Non-reinforced concrete
- Reinforced concrete
- Poroton
- Masonry

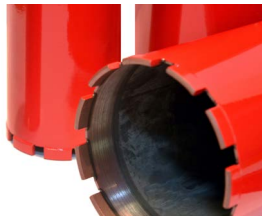

# = segments number
L = segment length
Segment = segment width
H = segment height

# = segments number
W = segments width
L = segment length
H = segment height

Via Leonardo da Vinci, 21
I-24030 Pontida (BG), Italy

+39 035 795029
info@cardi.biz

www.cardi.biz